Property Location 26 RACE LANE | Map ID 150/ 009/ / / | Bldg Name | State Use 1010
Vision ID 10047 | Account # 86533 | Bldg # 1 | Sec # 1 of 1 | Card # 1 of 1 | Print Date 1/31/2024 6:42:00 PM

CURRENT OWNER

GRAY, MATTHEW

PO BOX 140

WEST BARNSTA MA 02668

TOPO		UTILITIES		STRT / ROAD		LOCATION	
2	Above Street	6	Septic	1	Paved		
		4	Gas				
		2	Public Water				

SUPPLEMENTAL DATA

Alt Prcl ID
Split Zonin
BID Parcel
ResExpt Q YES:
#DL 1
#DL 2
GIS ID F_963471_2709263

Plan Ref. 149/45
Land Ct#
#SR
Life Estate
PP STATU
Assoc Pid#

CURRENT ASSESSMENT

Description	Code	Assessed	Assessed
RESIDNTL	1010	212,200	212,200
RES LAND	1010	179,600	179,600
Total		391,800	391,800

801

FY2024
BARNSTABLE, MA

VISION

RECORD OF OWNERSHIP

	BK-VOL/PAGE		SALE DATE	Q/U	V/I	SALE PRIC	VC
GRAY, MATTHEW	26816	0274	11-01-2012	U	I	10	1F
GRAY, MATTHEW & GOUGH, ROBERTA	18958	0114	08-23-2004	Q	I	279,000	00
ADAMS, ROBERT R	10527	0203	12-17-1996	U	I	1	1A
ADAMS, BERTA G ESTATE OF	9499	0126	12-15-1994	U	I	1	A
ADAMS, BERTA G	1045	0459	07-03-1959	U		0	

PREVIOUS ASSESSMENTS (HISTORY)

Year	Code	Assessed	Year	Code	Assessed V	Year	Code	Assessed
2023	1010	182,000	2022	1010	154,000	2021	1010	118,200
	1010	163,600		1010	122,100		1010	122,100
							1010	4,200
	Total	345,600		Total	276,100		Total	244,500

EXEMPTIONS

Year	Code	Description	Amount
2013	5C	RESIDENTIAL EXEMPTION	0.00
		Total	0.00

OTHER ASSESSMENTS

Code	Description	Number	Amount	Comm Int

This signature acknowledges a visit by a Data Collector or Assessor

ASSESSING NEIGHBORHOOD

Nbhd	Nbhd Name	B	Tracing	Batch
0105				MARSTM

NOTES

APPRAISED VALUE SUMMARY

Appraised Bldg. Value (Card)	205,600
Appraised Xf (B) Value (Bldg)	2,400
Appraised Ob (B) Value (Bldg)	4,200
Appraised Land Value (Bldg)	179,600
Special Land Value	0
Total Appraised Parcel Value	391,800
Valuation Method	C
Total Appraised Parcel Value	391,800

BUILDING PERMIT RECORD

Permit Id	Issue Date	Type	Description	Amount	Insp Date	% Comp	Date Comp	Comments
201302696	04-26-2013	SH	Shed	0	06-30-2013	100	06-30-2013	SHED 8X10
200704272	06-13-2007	OB	Out Building		09-05-2007	100	07-30-2007	SHED

VISIT / CHANGE HISTORY

Date	Id	Type	Is	Cd	Purpost/Result
05-01-2020	LS			FR	Field Review
01-07-2020	SR	02		03	Cycl Insp Comp
05-26-2016	AL	22		22	Change of Address
05-26-2016	AL	22		22	Change of Address
03-19-2013	GC	03		16	In Office Review
11-19-2012	DR	22		22	Change of Address
11-05-2012	DR	03		16	In Office Review

LAND LINE VALUATION SECTION

B	Use Code	Description	Zone	LA	Land Units		Unit Price	Size Adj	AC Disc	Site Index	Cond.	Nbhd.	Nbhd. Adj	Notes	Location Adjustmen	Adj Unit P	Land Value
1	1010	Single Fam M-0	RF	3	1.000	AC	176,344.00	1.00000	1.0000	5	1.00	0105	1.000	ABUTS ROUTE 28	1.0000	176,344	176,300
1	1010	Single Fam M-0	RF	3	0.230	AC	14,250.00	1.00000	1.0000	0	1.00	0105	1.000		1.0000	14,250	3,300

Total Card Land Units 1.23 AC | Parcel Total Land Area 1.23 | Total Land Value 179,600

Property Location 26 RACE LANE | Map ID 150/ 009/ / / | Bldg Name | State Use 1010
Vision ID 10047 | Account # 86533 | Bldg # 1 | Sec # 1 of 1 | Card # 1 of 1 | Print Date 1/31/2024 6:42:00 PM

CONSTRUCTION DETAIL

Element	Cd	Description
Style	01	Ranch
Model	01	Residential
Grade:	C	Average
Stories	1	1 Story
Exterior Wall 1	14	Wood Shingle
Exterior Wall 2		
Roof Structure	03	Gable/Hip
Roof Cover	03	Asph/F Gls/Cmp
Interior Wall 1	05	Drywall
Interior Wall 2	04	Plywood Panel
Interior Floor 1	12	Hardwood
Interior Floor 2	09	Pine/Soft Wood
Heat Fuel	03	Gas
Heat Type	04	Hot Air
AC Type	01	None
Bedrooms	03	3 Bedrooms
Full Baths	1	
Half Baths	0	
Extra Fixtures		
Total Rooms	4	
Bath Style		
Kitchen Style		
Occupancy		
Usrfld 105		
Accessory Apt		
Foundation Alt	09	Blk/Pour Ftgs
Rms Prts		
Bath Split	10	1 Full-0 Half

CONSTRUCTION DETAIL (CONTINUED)

Element	Cd	Description

CONDO DATA

Parcel Id		C		Owne	0.0
		B		S	

Adjust Type	Code	Description	Factor%
Condo Flr			
Condo Unit			

COST / MARKET VALUATION

Building Value New	285,521
Year Built	1955
Effective Year Built	1983
Depreciation Code	A
Remodel Rating	
Year Remodeled	
Depreciation %	28
Functional Obsol	0
External Obsol	0
Trend Factor	1
Condition	
Condition %	
Percent Good	72
RCNLD	205,600
Dep % Ovr	
Dep Ovr Comment	
Misc Imp Ovr	
Misc Imp Ovr Comment	
Cost to Cure Ovr	
Cost to Cure Ovr Comment	

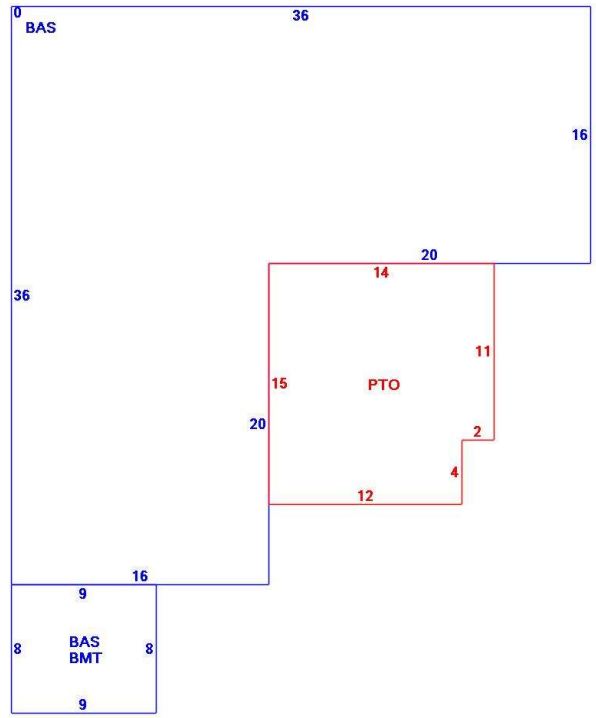

OB - OUTBUILDING & YARD ITEMS(L) / XF - BUILDING EXTRA FEATURES(B)

Code	Description	L/B	Units	Unit Price	Yr Blt	Cond. Cd	% Gd	Grade	Grade Adj.	Appr. Value
PAT2	Patio-Good	L	202	9.94	1992		73		0.00	1,600
BMT	Basement-Unfi	B	72	26.01	1985		72		0.00	2,400
SHED	Shed	L	120	18.00	2020		100		0.00	2,200
SHED	Shed	L	24	18.00	2020		100		0.00	400

BUILDING SUB-AREA SUMMARY SECTION

Code	Description	Living Area	Floor Area	Eff Area	Unit Cost	Undeprec Value
BAS	First Floor	968	968	968	294.96	285,521
BMT	Basement Area	0	72	0	0.00	0
PTO	Patio	0	202	0	0.00	0
	Ttl Gross Liv / Lease Area	968	1,242	968		285,521