Property Location 1575 OLD STAGE ROAD | Map ID 151/ 008/ 001/ / | Bldg Name | State Use 1010
Vision ID 10140 | Account # 371378 | Bldg # 1 | Sec # 1 of 1 | Card # 1 of 2 | Print Date 1/31/2024 6:52:35 PM

CURRENT OWNER

DASILVA, PAULO BUENO

1575 OLD STAGE ROAD

WEST BARNSTA MA 02668

TOPO		UTILITIES		STRT / ROAD		LOCATION	
2	Above Street	2	Public Water	1	Paved		
		4	Gas				
		6	Septic				

SUPPLEMENTAL DATA

Alt Prcl ID		Plan Ref.	426/66-68
Split Zonin		Land Ct#	
BID Parcel		#SR	
ResExpt Q	NO APP:	Life Estate	
#DL 1	LOT 1	PP STATU	
#DL 2			
GIS ID	F_962921_2711764	Assoc Pid#	

CURRENT ASSESSMENT

Description	Code	Assessed	Assessed
RESIDNTL	1010	543,700	543,700
RES LAND	1010	171,800	171,800
Total		715,500	715,500

801

FY2024
BARNSTABLE, MA

VISION

RECORD OF OWNERSHIP

	BK-VOL/PAGE		SALE DATE	Q/U	V/I	SALE PRIC	VC
DASILVA, PAULO BUENO	31032	0084	01-18-2018	Q	I	450,000	00
LEMONT, RICHARD B JR & JERILYN PIN	25656	0096	08-31-2011	Q	I	398,000	00
NAUGHTON, JOSEPH A	22337	0177	09-14-2007	Q	I	383,000	00
URIBAZO, OLGA C & JORGE C	16063	0149	12-11-2002	U	I	1	1A
URIBAZO, GEORGE C & GINA M	7602	0138	07-15-1991	U	V	32,500	L

PREVIOUS ASSESSMENTS (HISTORY)

Year	Code	Assessed	Year	Code	Assessed V	Year	Code	Assessed
2023	1010	493,300	2022	1010	422,400	2021	1010	329,100
	1010	156,200		1010	115,700		1010	115,700
							1010	42,500
	Total	649,500		Total	538,100		Total	487,300

EXEMPTIONS

Year	Code	Description	Amount
2020	N5C	NO RESIDENTIAL EXEMPTION	0.00
		Total	0.00

OTHER ASSESSMENTS

Code	Description	Number	Amount	Comm Int

This signature acknowledges a visit by a Data Collector or Assessor

ASSESSING NEIGHBORHOOD

Nbhd	Nbhd Name	B	Tracing	Batch
0105				MARSTM

NOTES

APPRAISED VALUE SUMMARY

Appraised Bldg. Value (Card)	439,800
Appraised Xf (B) Value (Bldg)	61,400
Appraised Ob (B) Value (Bldg)	42,500
Appraised Land Value (Bldg)	171,800
Special Land Value	0
Total Appraised Parcel Value	715,500
Valuation Method	C
Total Appraised Parcel Value	715,500

BUILDING PERMIT RECORD

Permit Id	Issue Date	Type	Description	Amount	Insp Date	% Comp	Date Comp	Comments
EXPR-23-9	07-25-2023	835	Sid/Wind/Roof/	5,580		100		Insulation / Weatherization
19-3492	10-31-2019	804	Addn Alt-Res	10,000	06-19-2020	100	06-30-2020	Rebuilding existing deck 15x4
19-2682	08-20-2019	835	Sid/Wind/Roof/	8,500	06-19-2020	100	06-30-2020	SIDING WINDOWS
201104325	08-15-2011	FB	Finish Basemen	5,000	02-09-2012	100	06-30-2012	FIN BMT-FAM RM, GM RM, .5
48598	09-12-2000	SP	Swimming Pool	27,000	03-06-2001	100	01-01-2001	
B34580	09-01-1991	DW	Dwelling	100,000	01-15-1993	100	06-30-1993	CE 2 STOR

VISIT / CHANGE HISTORY

Date	Id	Type	Is	Cd	Purpost/Result
06-19-2020	SR	01		02	Bldg Permit Completed
04-29-2020	LS			FR	Field Review
02-04-2015	TW	03		16	In Office Review
01-30-2014	DR	22		22	Change of Address
03-30-2012	NF	02		20	Sale Review
02-24-2012	RB	03		16	In Office Review
09-06-2011	JR	03		16	In Office Review

LAND LINE VALUATION SECTION

B	Use Code	Description	Zone	LA	Land Units		Unit Price	Size Adj	AC Disc	Site Index	Cond.	Nbhd.	Nbhd. Adj	Notes	Location Adjustmen	Adj Unit P	Land Value
1	1010	Single Fam M-0	RF	3	0.740	AC	176,344.00	1.31646	1.0000	5	1.00	0105	1.000		1.0000	232,156.8	171,800

Total Card Land Units 0.74 AC | Parcel Total Land Area 0.74 | Total Land Value 171,800

Property Location 1575 OLD STAGE ROAD | Map ID 151/ 008/ 001/ / | Bldg Name | State Use 1010
Vision ID 10140 | Account # 371378 | Bldg # 1 | Sec # 1 of 1 | Card # 1 of 2 | Print Date 1/31/2024 6:52:36 PM

CONSTRUCTION DETAIL

Element	Cd	Description
Style	04	Cape Cod
Model	01	Residential
Grade:	C	Average
Stories	1.75	1 3/4 Stories
Exterior Wall 1	25	Vinyl Siding
Exterior Wall 2		
Roof Structure	03	Gable/Hip
Roof Cover	03	Asph/F Gls/Cmp
Interior Wall 1	05	Drywall
Interior Wall 2		
Interior Floor 1	14	Carpet
Interior Floor 2	12	Hardwood
Heat Fuel	03	Gas
Heat Type	05	Hot Water
AC Type	01	None
Bedrooms	03	3 Bedrooms
Full Baths	2	
Half Baths	1	
Extra Fixtures		
Total Rooms	7	7 Rooms
Bath Style		
Kitchen Style		
Occupancy		
Usrfld 105		
Accessory Apt		
Foundation Alt	01	Poured Conc.
Rms Prts		
Bath Split	21	2 Full-1 Half

CONSTRUCTION DETAIL (CONTINUED)

Element	Cd	Description

CONDO DATA

Parcel Id		C		Owne	0.0
		B		S	

Adjust Type	Code	Description	Factor%
Condo Flr			
Condo Unit			

COST / MARKET VALUATION

Building Value New	511,443
Year Built	1991
Effective Year Built	2001
Depreciation Code	A
Remodel Rating	
Year Remodeled	
Depreciation %	14
Functional Obsol	0
External Obsol	0
Trend Factor	1
Condition	
Condition %	
Percent Good	86
RCNLD	439,800
Dep % Ovr	
Dep Ovr Comment	
Misc Imp Ovr	
Misc Imp Ovr Comment	
Cost to Cure Ovr	
Cost to Cure Ovr Comment	

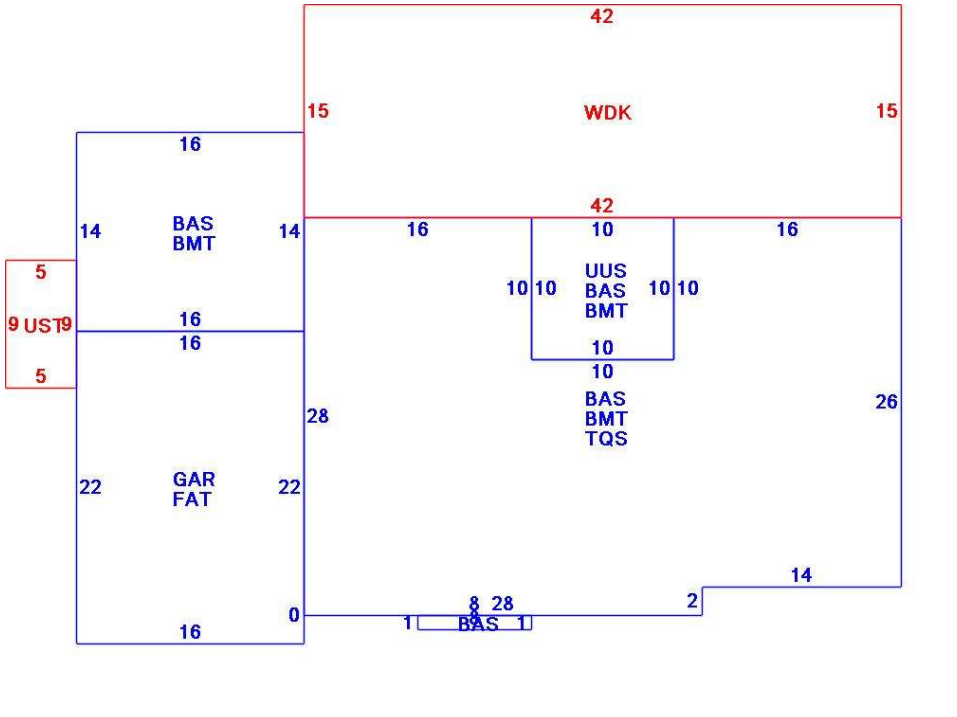

OB - OUTBUILDING & YARD ITEMS(L) / XF - BUILDING EXTRA FEATURES(B)

Code	Description	L/B	Units	Unit Price	Yr Blt	Cond. Cd	% Gd	Grade	Grade Adj.	Appr. Value
FPLG	Gas Fireplace-	B	1	2500.00	2003		86		0.00	2,200
SPL2	Pool Vinyl	L	544	55.00	2000		62	00	1.00	18,400
WDC	Wood Deck w/	L	630	18.00	2019		100		0.00	10,500
GAR	Attached Gara	B	352	40.00	2003		86		0.00	12,800
BMT	Basement-Unfi	B	1,372	26.01	2003		86		0.00	28,600
BFA	Bsmt Fin-Avg	B	860	17.36	2003		86		0.00	12,800
SPH2	Pool Heater 50	L	1	3081.00	2000		62		0.00	1,900
PAT1	Patio- Average	L	851	5.89	2000		81		0.00	3,700
SPDC	POOL DECK	L	851	5.61	2000		81		0.00	3,900
FPL1	Fireplace 1 sto	B	1	5000.00	2003		86		0.00	4,300

BUILDING SUB-AREA SUMMARY SECTION

Code	Description	Living Area	Floor Area	Eff Area	Unit Cost	Undeprec Value
BAS	First Floor	1,380	1,380	1,380	232.58	320,960
BMT	Basement Area	0	1,372	0	0.00	0
FAT	Attic, Finished	53	352	53	35.02	12,327
GAR	Attached Garage	0	352	0	0.00	0
TQS	Three Quarter Story	681	1,048	681	151.13	158,387
UST	Utility Enclosure	0	45	0	0.00	0
UUS	Upper Story, Unfinished	0	100	85	197.69	19,769
WDK	Wood Deck	0	630	0	0.00	0
	Ttl Gross Liv / Lease Area	2,114	5,279	2,199		511,443

Property Location 1575 OLD STAGE ROAD | Map ID 151/ 008/ 001/ / | Bldg Name | State Use 1010
Vision ID 10140 | Account # 371378 | Bldg # 1 | Sec # 1 of 1 | Card # 2 of 2 | Print Date 1/31/2024 6:52:36 PM

CURRENT OWNER	TOPO	UTILITIES	STRT / ROAD	LOCATION
DASILVA, PAULO BUENO	2 Above Street	2 Public Water	1 Paved	
		4 Gas		
1575 OLD STAGE ROAD		6 Septic		
WEST BARNSTA MA 02668				

SUPPLEMENTAL DATA

Alt Prcl ID		Plan Ref.	426/66-68
Split Zonin		Land Ct#	
BID Parcel		#SR	
ResExpt Q	NO APP:	Life Estate	
#DL 1	LOT 1	PP STATU	
#DL 2			
GIS ID	F_962921_2711764	Assoc Pid#	

CURRENT ASSESSMENT

Description	Code	Assessed	Assessed
RESIDNTL	1010	543,700	543,700
RES LAND	1010	171,800	171,800
	Total	715,500	715,500

801

FY2024
BARNSTABLE, MA

VISION

RECORD OF OWNERSHIP

BK-VOL/PAGE		SALE DATE	Q/U	V/I	SALE PRIC	VC

PREVIOUS ASSESSMENTS (HISTORY)

Year	Code	Assessed	Year	Code	Assessed V	Year	Code	Assessed
2023	1010	493,300	2022	1010	422,400	2021	1010	329,100
	1010	156,200		1010	115,700		1010	115,700
							1010	42,500
	Total	649,500		Total	538,100		Total	487,300

EXEMPTIONS

Year	Code	Description	Amount
		Total	

OTHER ASSESSMENTS

Code	Description	Number	Amount	Comm Int

This signature acknowledges a visit by a Data Collector or Assessor

APPRAISED VALUE SUMMARY

Appraised Bldg. Value (Card)	439,800
Appraised Xf (B) Value (Bldg)	61,400
Appraised Ob (B) Value (Bldg)	42,500
Appraised Land Value (Bldg)	171,800
Special Land Value	0
Total Appraised Parcel Value	715,500
Valuation Method	C
Total Appraised Parcel Value	715,500

ASSESSING NEIGHBORHOOD

Nbhd	Nbhd Name	B	Tracing	Batch
0105				MARSTM

NOTES

BUILDING PERMIT RECORD

Permit Id	Issue Date	Type	Description	Amount	Insp Date	% Comp	Date Comp	Comments

VISIT / CHANGE HISTORY

Date	Id	Type	Is	Cd	Purpost/Result

LAND LINE VALUATION SECTION

B	Use Code	Description	Zone	LA	Land Units		Unit Price	Size Adj	AC Disc	Site Index	Cond.	Nbhd.	Nbhd. Adj	Notes	Location Adjustmen		Adj Unit P	Land Value

Total Card Land Units | Parcel Total Land Area | Total Land Value

Property Location 1575 OLD STAGE ROAD | Map ID 151/ 008/ 001/ / | Bldg Name | State Use 1010
Vision ID 10140 | Account # 371378 | Bldg # 1 | Sec # 1 of 1 | Card # 2 of 2 | Print Date 1/31/2024 6:52:36 PM

CONSTRUCTION DETAIL

Element	Cd	Description
Style	04	Cape Cod
Model	01	Residential
Grade:	C	Average
Stories	1.75	1 3/4 Stories
Exterior Wall 1	25	Vinyl Siding
Exterior Wall 2		
Roof Structure	03	Gable/Hip
Roof Cover	03	Asph/F Gls/Cmp
Interior Wall 1	05	Drywall
Interior Wall 2		
Interior Floor 1	14	Carpet
Interior Floor 2	12	Hardwood
Heat Fuel	03	Gas
Heat Type	05	Hot Water
AC Type	01	None
Bedrooms	03	3 Bedrooms
Full Baths	2	
Half Baths	1	
Extra Fixtures		
Total Rooms	7	7 Rooms
Bath Style		
Kitchen Style		
Occupancy		
Usrfld 105		
Accessory Apt		
Foundation Alt	01	Poured Conc.
Rms Prts		
Bath Split	21	2 Full-1 Half

CONSTRUCTION DETAIL (CONTINUED)

Element	Cd	Description

CONDO DATA

Parcel Id		C		Owne	0.0
		B		S	

Adjust Type	Code	Description	Factor%
Condo Flr			
Condo Unit			

COST / MARKET VALUATION

Building Value New	
Year Built	
Effective Year Built	
Depreciation Code	
Remodel Rating	
Year Remodeled	
Depreciation %	
Functional Obsol	
External Obsol	
Trend Factor	
Condition	
Condition %	
Percent Good	
RCNLD	
Dep % Ovr	
Dep Ovr Comment	
Misc Imp Ovr	
Misc Imp Ovr Comment	
Cost to Cure Ovr	
Cost to Cure Ovr Comment	

OB - OUTBUILDING & YARD ITEMS(L) / XF - BUILDING EXTRA FEATURES(B)

Code	Description	L/B	Units	Unit Price	Yr Blt	Cond. Cd	% Gd	Grade	Grade Adj.	Appr. Value
FOPD	FOP-CONCR	L	144	31.41	2019		100	C	1.00	4,100
UST	Utility Storage-	B	45	17.11	2003		86		0.00	700

BUILDING SUB-AREA SUMMARY SECTION

Code	Description	Living Area	Floor Area	Eff Area	Unit Cost	Undeprec Value
	Ttl Gross Liv / Lease Area					