Property Location 50 OSPREY DRIVE | Map ID 002/ 002/ 069/ / | Bldg Name | State Use 1010
Vision ID 105651 | Account # 115 | Bldg # 1 | Sec # 1 of 1 | Card # 1 of 1 | Print Date 2/6/2024 9:30:22 AM

CURRENT OWNER

COHEN, WILLIAM & SUSAN L

50 OSPREY DRIVE

COTUIT MA 02635

TOPO / UTILITIES / STRT / ROAD / LOCATION

SUPPLEMENTAL DATA

Alt Prcl ID		Plan Ref.	617/74
Split Zonin		Land Ct#	
BID Parcel		#SR	
ResExpt Q	YES:	Life Estate	
#DL 1	LOT 69	PP STATU	
#DL 2	PHASE I		
GIS ID	F_939064_2693909	Assoc Pid#	

CURRENT ASSESSMENT

Description	Code	Assessed	Assessed
RESIDNTL	1010	537,300	537,300
RES LAND	1010	249,300	249,300
Total		786,600	786,600

801

FY2024
BARNSTABLE, MA

VISION

RECORD OF OWNERSHIP

	BK-VOL/PAGE		SALE DATE	Q/U	V/I	SALE PRIC	VC
COHEN, WILLIAM & SUSAN L	32222	0275	08-15-2019	Q	I	534,250	00
PARKER, FRED A	28758	0094	03-25-2015	U	I	10	1F
PARKER, FRED A	26927	0294	12-07-2012	U	I	1	1F
PARKER, FRED A & PATRICIA C	24684	0328	07-15-2010	Q	I	451,000	00
COTUIT EQUITABLE HOUSING LLC	21804	0041	02-26-2007	U	V	1	1V

PREVIOUS ASSESSMENTS (HISTORY)

Year	Code	Assessed	Year	Code	Assessed V	Year	Code	Assessed
2023	1010	475,800	2022	1010	402,600	2021	1010	338,100
	1010	246,700		1010	158,000		1010	167,900
							1010	4,400
	Total	722,500		Total	560,600		Total	510,400

EXEMPTIONS

Year	Code	Description	Amount
2022	5C	RESIDENTIAL EXEMPTION	0.00
		Total	0.00

OTHER ASSESSMENTS

Code	Description	Number	Amount	Comm Int

This signature acknowledges a visit by a Data Collector or Assessor

ASSESSING NEIGHBORHOOD

Nbhd	Nbhd Name	B	Tracing	Batch
0107				COTUIT

NOTES

APPRAISED VALUE SUMMARY

Appraised Bldg. Value (Card)	486,500
Appraised Xf (B) Value (Bldg)	46,400
Appraised Ob (B) Value (Bldg)	4,400
Appraised Land Value (Bldg)	249,300
Special Land Value	0
Total Appraised Parcel Value	786,600
Valuation Method	C
Total Appraised Parcel Value	786,600

BUILDING PERMIT RECORD

Permit Id	Issue Date	Type	Description	Amount	Insp Date	% Comp	Date Comp	Comments
201000592	02-19-2010	DW	Dwelling	235,000	06-23-2010	100	06-30-2010	3BD 2.5BTH CAPE ATT 1CAR

VISIT / CHANGE HISTORY

Date	Id	Type	Is	Cd	Purpost/Result
01-12-2022	AS	03		16	In Office Review
10-27-2020	CK	22		22	Change of Address
05-26-2020	DM			FR	Field Review
05-12-2020	SR	02		03	Cycl Insp Comp
06-25-2010	NF	03		02	Bldg Permit Completed
10-14-2008	NF	03		16	In Office Review
01-14-2008	DR	03		16	In Office Review

LAND LINE VALUATION SECTION

B	Use Code	Description	Zone	LA	Land Units		Unit Price	Size Adj	AC Disc	Site Index	Cond.	Nbhd.	Nbhd. Adj	Notes	Location Adjustmen	Adj Unit P	Land Value
1	1010	Single Fam M-0	RF	2	0.230	AC	176,344.00	3.61599	1.0000	5	1.00	0108	1.700		1.0000	1,084,021	249,300

Total Card Land Units 0.23 AC | Parcel Total Land Area 0.23 | Total Land Value 249,300

Property Location 50 OSPREY DRIVE | Map ID 002/ 002/ 069/ / | Bldg Name | State Use 1010
Vision ID 105651 | Account # 115 | Bldg # 1 | Sec # 1 of 1 | Card # 1 of 1 | Print Date 2/6/2024 9:30:22 AM

CONSTRUCTION DETAIL

Element	Cd	Description
Style	04	Cape Cod
Model	01	Residential
Grade:	C+	Average Plus
Stories	1.75	1 3/4 Stories
Exterior Wall 1	14	Wood Shingle
Exterior Wall 2		
Roof Structure	03	Gable/Hip
Roof Cover	03	Asph/F Gls/Cmp
Interior Wall 1	05	Drywall
Interior Wall 2		
Interior Floor 1	12	Hardwood
Interior Floor 2	14	Carpet
Heat Fuel	03	Gas
Heat Type	04	Hot Air
AC Type	03	Central
Bedrooms	03	3 Bedrooms
Full Baths	2	
Half Baths	1	
Extra Fixtures	1	
Total Rooms	7	
Bath Style		
Kitchen Style	02	Modernized
Occupancy		
Usrfld 105		
Accessory Apt		
Foundation Alt	01	Poured Conc.
Rms Prts		
Bath Split	21	2 Full-1 Half

CONSTRUCTION DETAIL (CONTINUED)

Element	Cd	Description

CONDO DATA

Parcel Id		C		Owne	0.0
		B		S	

Adjust Type	Code	Description	Factor%
Condo Flr			
Condo Unit			

COST / MARKET VALUATION

Building Value New	517,512
Year Built	2010
Effective Year Built	2011
Depreciation Code	A
Remodel Rating	
Year Remodeled	
Depreciation %	6
Functional Obsol	
External Obsol	
Trend Factor	1
Condition	
Condition %	
Percent Good	94
RCNLD	486,500
Dep % Ovr	
Dep Ovr Comment	
Misc Imp Ovr	
Misc Imp Ovr Comment	
Cost to Cure Ovr	
Cost to Cure Ovr Comment	

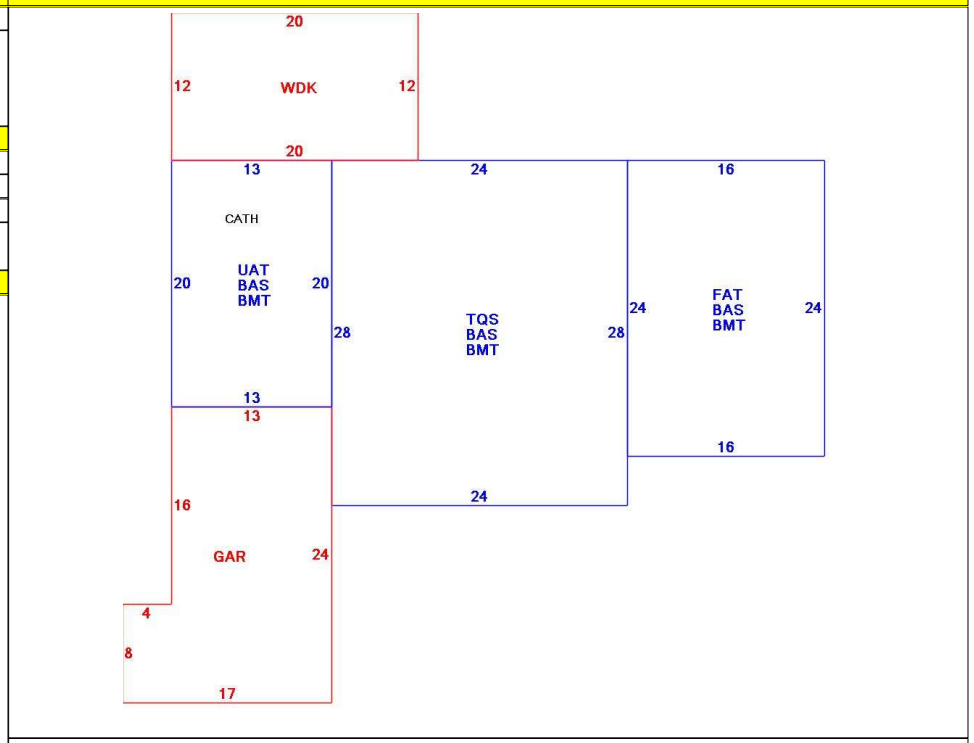

OB - OUTBUILDING & YARD ITEMS(L) / XF - BUILDING EXTRA FEATURES(B)

Code	Description	L/B	Units	Unit Price	Yr Blt	Cond. Cd	% Gd	Grade	Grade Adj.	Appr. Value
FPLG	Gas Fireplace-	B	1	2500.00	2013		94		0.00	2,400
WDC	Wood Decking	L	240	20.00	2011		84		0.00	4,400
GAR	Attached Gara	B	344	40.00	2013		94		0.00	13,800
BMT	Basement-Unfi	B	1,316	26.01	2013		94		0.00	30,200

BUILDING SUB-AREA SUMMARY SECTION

Code	Description	Living Area	Floor Area	Eff Area	Unit Cost	Undeprec Value
BAS	First Floor	1,316	1,316	1,316	281.24	370,108
BMT	Basement Area	0	1,316	0	0.00	0
FAT	Attic, Finished	58	384	58	42.48	16,312
GAR	Attached Garage	0	344	0	0.00	0
TQS	Three Quarter Story	437	672	437	182.89	122,901
UAT	Attic, Unfinished	0	260	26	28.12	7,312
WDK	Wood Deck	0	240	0	0.00	0
	Ttl Gross Liv / Lease Area	1,811	4,532	1,837		516,633