Property Location 7 SPRING BROOK LANE | Map ID 002/ 002/ 103/ / | Bldg Name | State Use 1010
Vision ID 105685 | Account # 154 | Bldg # 1 | Sec # 1 of 1 | Card # 1 of 1 | Print Date 2/6/2024 9:34:26 AM

CURRENT OWNER

VACCARELLO, RICHARD H TR
RICHARD H VACCARELLO 2011 TRU
6474 WARWICK AVENUE

NAPLES FL 34113

TOPO / UTILITIES / STRT / ROAD / LOCATION

SUPPLEMENTAL DATA

Alt Prcl ID		Plan Ref.	617/71
Split Zonin		Land Ct#	
BID Parcel		#SR	
ResExpt Q		Life Estate	
#DL 1	LOT 103	PP STATU	A:Active
#DL 2	PHASE II		
GIS ID	F_939901_2693888	Assoc Pid#	

CURRENT ASSESSMENT

Description	Code	Assessed	Assessed
RESIDNTL	1010	575,400	575,400
RES LAND	1010	256,000	256,000
Total		831,400	831,400

801
FY2024
BARNSTABLE, MA

VISION

RECORD OF OWNERSHIP

	BK-VOL/PAGE		SALE DATE	Q/U	V/I	SALE PRIC	VC
VACCARELLO, RICHARD H TR	36036	330	10-16-2023	Q	I	899,000	00
KEANE, KELLY A	29752	0024	06-24-2016	Q	I	549,000	00
COTUIT EQUITABLE HOUSING LLC	21804	0041	02-26-2007	U	V	1	1V

PREVIOUS ASSESSMENTS (HISTORY)

Year	Code	Assessed	Year	Code	Assessed V	Year	Code	Assessed
2023	1010	499,600	2022	1010	434,900	2021	1010	351,600
	1010	253,300		1010	162,300		1010	172,400
							1010	4,200
	Total	752,900		Total	597,200		Total	528,200

EXEMPTIONS

Year	Code	Description	Amount
		Total	0.00

OTHER ASSESSMENTS

Code	Description	Number	Amount	Comm Int

This signature acknowledges a visit by a Data Collector or Assessor

APPRAISED VALUE SUMMARY

Appraised Bldg. Value (Card)	509,400
Appraised Xf (B) Value (Bldg)	61,800
Appraised Ob (B) Value (Bldg)	4,200
Appraised Land Value (Bldg)	256,000
Special Land Value	0
Total Appraised Parcel Value	831,400
Valuation Method	C
Total Appraised Parcel Value	831,400

ASSESSING NEIGHBORHOOD

Nbhd	Nbhd Name	B	Tracing	Batch
0107				COTUIT

NOTES

BUILDING PERMIT RECORD

Permit Id	Issue Date	Type	Description	Amount	Insp Date	% Comp	Date Comp	Comments
201502573	05-18-2015	DW	Dwelling	220,000	11-16-2015	100	06-30-2016	CONSTRUCT A THREE BED

VISIT / CHANGE HISTORY

Date	Id	Type	Is	Cd	Purpost/Result
05-26-2020	DM			FR	Field Review
12-07-2015	SR	01		02	Bldg Permit Completed
06-29-2015	SR	02		13	CALL BACK
06-24-2013	JR	03		16	In Office Review
04-28-2009	KLP	03		16	In Office Review
10-14-2008	NF	03		16	In Office Review
01-14-2008	DR	03		16	In Office Review

LAND LINE VALUATION SECTION

B	Use Code	Description	Zone	LA	Land Units		Unit Price	Size Adj	AC Disc	Site Index	Cond.	Nbhd.	Nbhd. Adj	Notes	Location Adjustmen	Adj Unit P	Land Value
1	1010	Single Fam M-0	RF	2	0.300	AC	176,344.00	2.84692	1.0000	5	1.00	0108	1.700		1.0000	853,469.6	256,000

Total Card Land Units 0.30 AC | Parcel Total Land Area 0.30 | Total Land Value 256,000

Property Location 7 SPRING BROOK LANE | Map ID 002/ 002/ 103/ / | Bldg Name | State Use 1010
Vision ID 105685 | Account # 154 | Bldg # 1 | Sec # 1 of 1 | Card # 1 of 1 | Print Date 2/6/2024 9:34:26 AM

CONSTRUCTION DETAIL

Element	Cd	Description
Style	01	Ranch
Model	01	Residential
Grade:	C+	Average Plus
Stories	1	1 Story
Exterior Wall 1	14	Wood Shingle
Exterior Wall 2		
Roof Structure	03	Gable/Hip
Roof Cover	03	Asph/F Gls/Cmp
Interior Wall 1	05	Drywall
Interior Wall 2		
Interior Floor 1	12	Hardwood
Interior Floor 2	14	Carpet
Heat Fuel	03	Gas
Heat Type	04	Hot Air
AC Type	03	Central
Bedrooms	03	3 Bedrooms
Full Baths	2	
Half Baths	0	
Extra Fixtures		
Total Rooms	7	
Bath Style		
Kitchen Style		
Occupancy		
Usrfld 105		
Accessory Apt		
Foundation Alt	01	Poured Conc.
Rms Prts		
Bath Split	20	2 Full-0 Half

CONSTRUCTION DETAIL (CONTINUED)

Element	Cd	Description

CONDO DATA

Parcel Id		C		Owne	0.0
		B		S	

Adjust Type	Code	Description	Factor%
Condo Flr			
Condo Unit			

COST / MARKET VALUATION

Building Value New	536,212
Year Built	2015
Effective Year Built	2013
Depreciation Code	A
Remodel Rating	
Year Remodeled	
Depreciation %	5
Functional Obsol	
External Obsol	
Trend Factor	1
Condition	
Condition %	
Percent Good	95
RCNLD	509,400
Dep % Ovr	
Dep Ovr Comment	
Misc Imp Ovr	
Misc Imp Ovr Comment	
Cost to Cure Ovr	
Cost to Cure Ovr Comment	

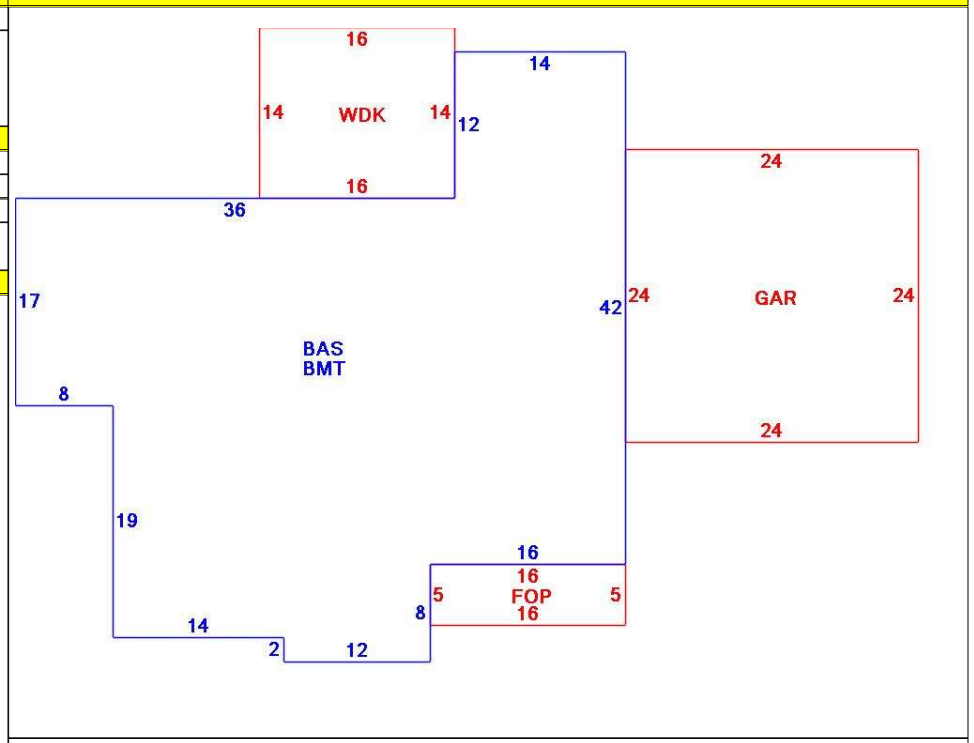

OB - OUTBUILDING & YARD ITEMS(L) / XF - BUILDING EXTRA FEATURES(B)

Code	Description	L/B	Units	Unit Price	Yr Blt	Cond. Cd	% Gd	Grade	Grade Adj.	Appr. Value
WDC	Wood Deck w/	L	224	18.00	2015		92		0.00	4,200
BMT	Basement-Unfi	B	1,744	26.01	2017		95		0.00	37,900
FOP	Open Porch-ro	B	80	55.00	2017		95		0.00	4,500
GAR	Attached Gara	B	576	40.00	2017		95		0.00	19,400

BUILDING SUB-AREA SUMMARY SECTION

Code	Description	Living Area	Floor Area	Eff Area	Unit Cost	Undeprec Value
BAS	First Floor	1,744	1,744	1,744	307.46	536,212
BMT	Basement Area	0	1,744	0	0.00	0
FOP	Open Porch	0	80	0	0.00	0
GAR	Attached Garage	0	576	0	0.00	0
WDK	Wood Deck	0	224	0	0.00	0
	Ttl Gross Liv / Lease Area	1,744	4,368	1,744		536,212