Property Location 30 FAIRWINDS DRIVE | Map ID 165/ 021/ 002/ / | Bldg Name | State Use 1010
Vision ID 10606 | Account # 438869 | Bldg # 1 | Sec # 1 of 1 | Card # 1 of 2 | Print Date 1/31/2024 7:45:09 PM

CURRENT OWNER

PASKOWITZ, MARIA & MICHAEL

115 W 69TH STREET

NEW YORK NY 10023

TOPO / UTILITIES / STRT / ROAD / LOCATION

TOPO		UTILITIES		STRT / ROAD		LOCATION	
1	Level	2	Public Water	1	Paved		
		4	Gas				
		6	Septic				

SUPPLEMENTAL DATA

Alt Prcl ID		Plan Ref.	
Split Zonin		Land Ct#	26824-B
BID Parcel		#SR	
ResExpt Q		Life Estate	
#DL 1	LOT 2	PP STATU	A:Active
#DL 2			
GIS ID	F_964993_2694317	Assoc Pid#	

CURRENT ASSESSMENT

Description	Code	Assessed	Assessed
RESIDNTL	1010	1,044,600	1,044,600
RES LAND	1010	970,700	970,700
Total		2,015,300	2,015,300

801

FY2024
BARNSTABLE, MA

VISION

RECORD OF OWNERSHIP

	BK-VOL/PAGE		SALE DATE	Q/U	V/I	SALE PRIC	VC
PASKOWITZ, MARIA & MICHAEL	C220844	0	10-18-2019	Q	I	1,100,000	00
FENNELL, TODD W TR	#D13153	0	02-21-2017	U	I	0	1F
CANUSO, SAUNIE TR	C212116	0	02-21-2017	Q	I	975,000	00
STEWART, DONALD M TR	C185701	0	04-15-2008	Q	I	1,272,500	00
TRICCA, CARL A & MARIE E	C176511	0	04-26-2005	U	I	1	1A

PREVIOUS ASSESSMENTS (HISTORY)

Year	Code	Assessed	Year	Code	Assessed V	Year	Code	Assessed
2023	1010	759,400	2022	1010	679,800	2021	1010	567,800
	1010	802,300		1010	523,100		1010	475,600
							1010	28,400
	Total	1,561,700		Total	1,202,900		Total	1,071,800

EXEMPTIONS

Year	Code	Description	Amount
		Total	0.00

OTHER ASSESSMENTS

Code	Description	Number	Amount	Comm Int

This signature acknowledges a visit by a Data Collector or Assessor

ASSESSING NEIGHBORHOOD

Nbhd	Nbhd Name	B	Tracing	Batch
0114				OSTVIL

NOTES

APPRAISED VALUE SUMMARY

Appraised Bldg. Value (Card)	793,000
Appraised Xf (B) Value (Bldg)	156,100
Appraised Ob (B) Value (Bldg)	95,500
Appraised Land Value (Bldg)	970,700
Special Land Value	0
Total Appraised Parcel Value	2,015,300
Valuation Method	C
Total Appraised Parcel Value	2,015,300

BUILDING PERMIT RECORD

Permit Id	Issue Date	Type	Description	Amount	Insp Date	% Comp	Date Comp	Comments
BLDR-23-14	03-23-2023	882	Detached Acce	80,000	06-09-2023	50		pool house
BLDR-22-14	11-22-2022	830	Pool - Inground	168,700	06-09-2023	50		Installation of a 24x48 rectangl
BLDR-21-15	01-06-2022	880	Alt-Int work-Res	125,000	06-09-2023	100	06-30-2023	Application to finish 2046sqft o
20-645	03-12-2020	804	Addn Alt-Res	35,000	08-10-2020	100	06-30-2020	MOVE LAUNDRY INTO BATH
29335	03-10-1998	SP	Swimming Pool	13,000	08-10-2020	100	01-01-1999	
25889	09-25-1997	DW	Dwelling	175,000	06-25-1998	100	01-01-1999	FND ONLY

VISIT / CHANGE HISTORY

Date	Id	Type	Is	Cd	Purpost/Result
06-09-2023	SR	02		13	CALL BACK
07-22-2022	SR	01		13	CALL BACK
08-10-2020	SR	02		02	Bldg Permit Completed
06-04-2020	WD			FR	Field Review
02-25-2020	SAF			20	Sale Review
08-04-2017	MS	02		14	Cyclical Inspection

LAND LINE VALUATION SECTION

B	Use Code	Description	Zone	LA	Land Units		Unit Price	Size Adj	AC Disc	Site Index	Cond.	Nbhd.	Nbhd. Adj	Notes	Location Adjustmen	Adj Unit P	Land Value
1	1010	Single Fam M-0	RC	3	1.000	AC	176,344.00	1.00000	1.0000	5	1.00	0112	5.500		1.0000	969,892	969,900
1	1010	Single Fam M-0	RC	3	0.010	AC	14,250.00	1.00000	1.0000	0	1.00	0112	5.500		1.0000	78,375	800

Total Card Land Units 1.01 AC | Parcel Total Land Area 1.01 | Total Land Value 970,700

Property Location 30 FAIRWINDS DRIVE | Map ID 165/ 021/ 002/ / | Bldg Name | State Use 1010
Vision ID 10606 | Account # 438869 | Bldg # 1 | Sec # 1 of 1 | Card # 1 of 2 | Print Date 1/31/2024 7:45:09 PM

CONSTRUCTION DETAIL

Element	Cd	Description
Style	07	Modern/Contemp
Model	01	Residential
Grade:	B	Custom
Stories	1.5	1 1/2 Stories
Exterior Wall 1	14	Wood Shingle
Exterior Wall 2		
Roof Structure	03	Gable/Hip
Roof Cover	03	Asph/F Gls/Cmp
Interior Wall 1	05	Drywall
Interior Wall 2		
Interior Floor 1	12	Hardwood
Interior Floor 2	14	Carpet
Heat Fuel	03	Gas
Heat Type	04	Hot Air
AC Type	03	Central
Bedrooms	03	3 Bedrooms
Full Baths	3	
Half Baths	0	
Extra Fixtures		
Total Rooms	6	6 Rooms
Bath Style		
Kitchen Style		
Occupancy		
Usrfld 105		
Accessory Apt		
Foundation Alt	01	Poured Conc.
Rms Prts		
Bath Split	30	3 Full-0 Half

CONSTRUCTION DETAIL (CONTINUED)

Element	Cd	Description

CONDO DATA

Parcel Id		C		Owne	0.0
		B		S	

Adjust Type	Code	Description	Factor%
Condo Flr			
Condo Unit			

COST / MARKET VALUATION

Building Value New	852,667
Year Built	1998
Effective Year Built	2010
Depreciation Code	G
Remodel Rating	
Year Remodeled	
Depreciation %	7
Functional Obsol	0
External Obsol	0
Trend Factor	1
Condition	
Condition %	
Percent Good	93
RCNLD	793,000
Dep % Ovr	
Dep Ovr Comment	
Misc Imp Ovr	
Misc Imp Ovr Comment	
Cost to Cure Ovr	
Cost to Cure Ovr Comment	

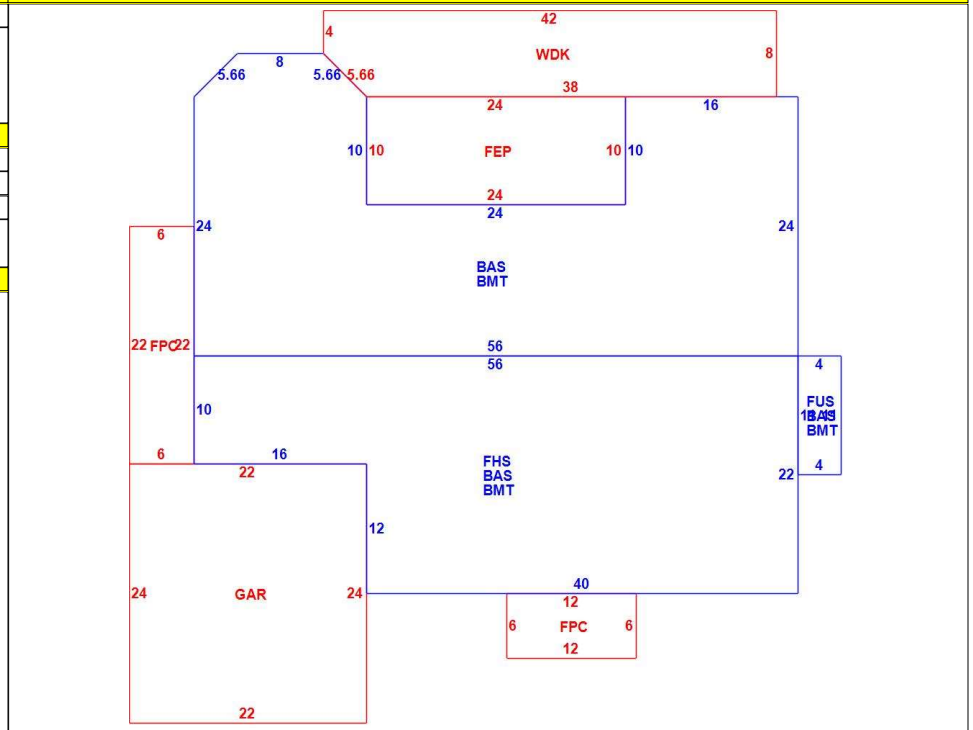

OB - OUTBUILDING & YARD ITEMS(L) / XF - BUILDING EXTRA FEATURES(B)

Code	Description	L/B	Units	Unit Price	Yr Blt	Cond. Cd	% Gd	Grade	Grade Adj.	Appr. Value
FPL1	Fireplace 1 sto	B	1	5000.00	2012		93		0.00	4,700
FPL2	Fireplace 1.5 s	B	1	6000.00	2012		93		0.00	5,600
FOPC	Open Prch-roo	B	204	55.00	2012		93		0.00	7,400
FEP	Enclosed porc	B	240	70.00	2012		93		0.00	13,100
GAR	Attached Gara	B	528	40.00	2012		93		0.00	17,900
BMT	Basement-Unfi	B	2,236	26.01	2012		93		0.00	45,400
SHED	Shed	L	96	18.00	1998		58		0.00	1,000
BFA1	Bsmt Fin-Goo	B	2,046	32.56	2012		93		0.00	62,000
WDC	Wood Deck w/	L	328	18.00	2022		100		0.00	5,800
SPL3	Pool Gunite	L	1,152	75.00	2023		50	C	1.00	40,600

BUILDING SUB-AREA SUMMARY SECTION

Code	Description	Living Area	Floor Area	Eff Area	Unit Cost	Undeprec Value
BAS	First Floor	2,236	2,236	2,236	304.52	680,916
BMT	Basement Area	0	2,236	0	0.00	0
FEP	Enclosed Porch	0	240	0	0.00	0
FHS	Half Story	520	1,040	520	152.26	158,352
FPC	Open Porch Conc. Floor	0	204	0	0.00	0
FUS	Upper Story	44	44	44	304.52	13,399
GAR	Attached Garage	0	528	0	0.00	0
WDK	Wood Deck	0	328	0	0.00	0
	Ttl Gross Liv / Lease Area	2,800	6,856	2,800		852,667

Property Location 30 FAIRWINDS DRIVE | Map ID 165/ 021/ 002/ / | Bldg Name | State Use 1010
Vision ID 10606 | Account # 438869 | Bldg # 1 | Sec # 1 of 1 | Card # 2 of 2 | Print Date 1/31/2024 7:45:10 PM

CURRENT OWNER	TOPO	UTILITIES	STRT / ROAD	LOCATION
PASKOWITZ, MARIA & MICHAEL	1 Level	2 Public Water	1 Paved	
		4 Gas		
115 W 69TH STREET		6 Septic		
NEW YORK NY 10023				

SUPPLEMENTAL DATA

Alt Prcl ID		Plan Ref.	
Split Zonin		Land Ct#	26824-B
BID Parcel		#SR	
ResExpt Q		Life Estate	
#DL 1	LOT 2	PP STATU	A:Active
#DL 2			
GIS ID	F_964993_2694317	Assoc Pid#	

CURRENT ASSESSMENT

Description	Code	Assessed	Assessed
RESIDNTL	1010	1,044,600	1,044,600
RES LAND	1010	970,700	970,700
Total		2,015,300	2,015,300

801
FY2024
BARNSTABLE, MA

VISION

RECORD OF OWNERSHIP

BK-VOL/PAGE		SALE DATE	Q/U	V/I	SALE PRIC	VC

PREVIOUS ASSESSMENTS (HISTORY)

Year	Code	Assessed	Year	Code	Assessed V	Year	Code	Assessed
2023	1010	759,400	2022	1010	679,800	2021	1010	567,800
	1010	802,300		1010	523,100		1010	475,600
							1010	28,400
	Total	1,561,700		Total	1,202,900		Total	1,071,800

EXEMPTIONS

Year	Code	Description	Amount
		Total	

OTHER ASSESSMENTS

Code	Description	Number	Amount	Comm Int

This signature acknowledges a visit by a Data Collector or Assessor

ASSESSING NEIGHBORHOOD

Nbhd	Nbhd Name	B	Tracing	Batch
0114				OSTVIL

NOTES

APPRAISED VALUE SUMMARY

Appraised Bldg. Value (Card)	793,000
Appraised Xf (B) Value (Bldg)	156,100
Appraised Ob (B) Value (Bldg)	95,500
Appraised Land Value (Bldg)	970,700
Special Land Value	0
Total Appraised Parcel Value	2,015,300
Valuation Method	C
Total Appraised Parcel Value	2,015,300

BUILDING PERMIT RECORD

Permit Id	Issue Date	Type	Description	Amount	Insp Date	% Comp	Date Comp	Comments

VISIT / CHANGE HISTORY

Date	Id	Type	Is	Cd	Purpost/Result

LAND LINE VALUATION SECTION

B	Use Code	Description	Zone	LA	Land Units		Unit Price	Size Adj	AC Disc	Site Index	Cond.	Nbhd.	Nbhd. Adj	Notes	Location Adjustmen		Adj Unit P	Land Value

Total Card Land Units | Parcel Total Land Area | Total Land Value

Property Location 30 FAIRWINDS DRIVE | Map ID 165/ 021/ 002/ / | Bldg Name | State Use 1010
Vision ID 10606 | Account # 438869 | Bldg # 1 | Sec # 1 of 1 | Card # 2 of 2 | Print Date 1/31/2024 7:45:10 PM

CONSTRUCTION DETAIL

Element	Cd	Description
Style	07	Modern/Contemp
Model	01	Residential
Grade:	B	Custom
Stories	1.5	1 1/2 Stories
Exterior Wall 1	14	Wood Shingle
Exterior Wall 2		
Roof Structure	03	Gable/Hip
Roof Cover	03	Asph/F Gls/Cmp
Interior Wall 1	05	Drywall
Interior Wall 2		
Interior Floor 1	12	Hardwood
Interior Floor 2	14	Carpet
Heat Fuel	03	Gas
Heat Type	04	Hot Air
AC Type	03	Central
Bedrooms	03	3 Bedrooms
Full Baths	3	
Half Baths	0	
Extra Fixtures		
Total Rooms	6	6 Rooms
Bath Style		
Kitchen Style		
Occupancy		
Usrfld 105		
Accessory Apt		
Foundation Alt	01	Poured Conc.
Rms Prts		
Bath Split	30	3 Full-0 Half

CONSTRUCTION DETAIL (CONTINUED)

Element	Cd	Description

CONDO DATA

Parcel Id		C		Owne	0.0
		B		S	

Adjust Type	Code	Description	Factor%
Condo Flr			
Condo Unit			

COST / MARKET VALUATION

Building Value New	
Year Built	
Effective Year Built	
Depreciation Code	
Remodel Rating	
Year Remodeled	
Depreciation %	
Functional Obsol	
External Obsol	
Trend Factor	
Condition	
Condition %	
Percent Good	
RCNLD	
Dep % Ovr	
Dep Ovr Comment	
Misc Imp Ovr	
Misc Imp Ovr Comment	
Cost to Cure Ovr	
Cost to Cure Ovr Comment	

OB - OUTBUILDING & YARD ITEMS(L) / XF - BUILDING EXTRA FEATURES(B)

Code	Description	L/B	Units	Unit Price	Yr Blt	Cond. Cd	% Gd	Grade	Grade Adj.	Appr. Value
SPC1	Pool Cover-Au	L	1,152	17.53	2023		50		0.00	10,100
PHS3	Pool Hs/Good,	L	320	180.00	2023		50	B	1.32	38,000

BUILDING SUB-AREA SUMMARY SECTION

Code	Description	Living Area	Floor Area	Eff Area	Unit Cost	Undeprec Value
	Ttl Gross Liv / Lease Area					