Property Location 56 BRALEY JENKINS ROAD | Map ID 171/ 185/ / / | Bldg Name | State Use 1010
Vision ID 11660 | Account # 372554 | Bldg # 1 | Sec # 1 of 1 | Card # 1 of 2 | Print Date 2/1/2024 10:16:06 AM

CURRENT OWNER

MESIALIDES, STYLIANOS

56 BRALEY JENKINS ROAD

CENTERVILLE MA 02632

TOPO		UTILITIES		STRT / ROAD		LOCATION	
1	Level	2	Public Water	1	Paved		
		4	Gas				
		6	Septic				

SUPPLEMENTAL DATA

Alt Prcl ID		Plan Ref.	306/17-24 (P 22)
Split Zonin		Land Ct#	
BID Parcel		#SR	
ResExpt Q		Life Estate	
#DL 1	LOT 152	PP STATU	
#DL 2			
GIS ID	F_966681_2705879	Assoc Pid#	

CURRENT ASSESSMENT

Description	Code	Assessed	Assessed
RESIDNTL	1010	476,800	476,800
RES LAND	1010	152,200	152,200
Total		629,000	629,000

801

FY2024
BARNSTABLE, MA

VISION

RECORD OF OWNERSHIP

	BK-VOL/PAGE		SALE DATE	Q/U	V/I	SALE PRIC	VC
MESIALIDES, STYLIANOS	28902	0304	05-29-2015	Q	I	377,400	00
DAVIES, PETER C & SHELLY C	22925	0317	05-21-2008	Q	I	397,250	00
MILLER, ROBERT W JR & MARY L	11834	0238	11-12-1998	Q	I	182,500	00
OHEARN, EDWARD & DEBORAH	5739	0133	05-15-1987	Q	I	155,800	U
SOLLOWS, JEFFREY A & LEBEL, DOUGL	5133	0067	06-15-1986	U	V	360,000	N

PREVIOUS ASSESSMENTS (HISTORY)

Year	Code	Assessed	Year	Code	Assessed V	Year	Code	Assessed
2023	1010	427,100	2022	1010	368,200	2021	1010	288,300
	1010	138,400		1010	102,500		1010	102,500
							1010	34,500
	Total	565,500		Total	470,700		Total	425,300

EXEMPTIONS

Year	Code	Description	Amount
		Total	0.00

OTHER ASSESSMENTS

Code	Description	Number	Amount	Comm Int

This signature acknowledges a visit by a Data Collector or Assessor

ASSESSING NEIGHBORHOOD

Nbhd	Nbhd Name	B	Tracing	Batch
0105				CENVIL

NOTES

APPRAISED VALUE SUMMARY

Appraised Bldg. Value (Card)	392,900
Appraised Xf (B) Value (Bldg)	49,400
Appraised Ob (B) Value (Bldg)	34,500
Appraised Land Value (Bldg)	152,200
Special Land Value	0
Total Appraised Parcel Value	629,000
Valuation Method	C
Total Appraised Parcel Value	629,000

BUILDING PERMIT RECORD

Permit Id	Issue Date	Type	Description	Amount	Insp Date	% Comp	Date Comp	Comments
B36839	06-01-1994	SP	Swimming Pool	13,500	01-15-1995	100		CE POOL
B30335	12-01-1986	DW	Dwelling	60,000	01-15-1988	100		CE 11/2 S

VISIT / CHANGE HISTORY

Date	Id	Type	Is	Cd	Purpost/Result
04-23-2020	LS			FR	Field Review
01-23-2018	KM	06		03	Cycl Insp Comp
06-01-2016	JR	03		20	Sale Review
06-15-2015	AL	22		22	Change of Address
04-15-2014	JR	03		16	In Office Review
03-26-2009	NF	01		20	Sale Review
08-19-2008	PT	02		14	Cyclical Inspection

LAND LINE VALUATION SECTION

B	Use Code	Description	Zone	LA	Land Units		Unit Price	Size Adj	AC Disc	Site Index	Cond.	Nbhd.	Nbhd. Adj	Notes	Location Adjustmen	Adj Unit P	Land Value
1	1010	Single Fam M-0	RC	3	0.350	AC	176,344.00	2.46674	1.0000	5	1.00	0105	1.000		1.0000	434,987.7	152,200

Total Card Land Units 0.35 AC | Parcel Total Land Area 0.35 | Total Land Value 152,200

Property Location 56 BRALEY JENKINS ROAD | Map ID 171/ 185/ / / | Bldg Name | State Use 1010
Vision ID 11660 | Account # 372554 | Bldg # 1 | Sec # 1 of 1 | Card # 1 of 2 | Print Date 2/1/2024 10:16:06 AM

CONSTRUCTION DETAIL

Element	Cd	Description
Style	04	Cape Cod
Model	01	Residential
Grade:	C+	Average Plus
Stories	1.75	1 3/4 Stories
Exterior Wall 1	14	Wood Shingle
Exterior Wall 2	11	Clapboard
Roof Structure	03	Gable/Hip
Roof Cover	03	Asph/F Gls/Cmp
Interior Wall 1	05	Drywall
Interior Wall 2		
Interior Floor 1	14	Carpet
Interior Floor 2	12	Hardwood
Heat Fuel	03	Gas
Heat Type	04	Hot Air
AC Type	03	Central
Bedrooms	03	3 Bedrooms
Full Baths	2	
Half Baths	1	
Extra Fixtures		
Total Rooms	5	
Bath Style		
Kitchen Style		
Occupancy		
Usrfld 105		
Accessory Apt		
Foundation Alt	01	Poured Conc.
Rms Prts		
Bath Split	21	2 Full-1 Half

CONSTRUCTION DETAIL (CONTINUED)

Element	Cd	Description

CONDO DATA

Parcel Id		C		Owne	0.0
		B		S	

Adjust Type	Code	Description	Factor%
Condo Flr			
Condo Unit			

COST / MARKET VALUATION

Building Value New	446,517
Year Built	1986
Effective Year Built	2004
Depreciation Code	G
Remodel Rating	
Year Remodeled	
Depreciation %	12
Functional Obsol	0
External Obsol	0
Trend Factor	1
Condition	
Condition %	
Percent Good	88
RCNLD	392,900
Dep % Ovr	
Dep Ovr Comment	
Misc Imp Ovr	
Misc Imp Ovr Comment	
Cost to Cure Ovr	
Cost to Cure Ovr Comment	

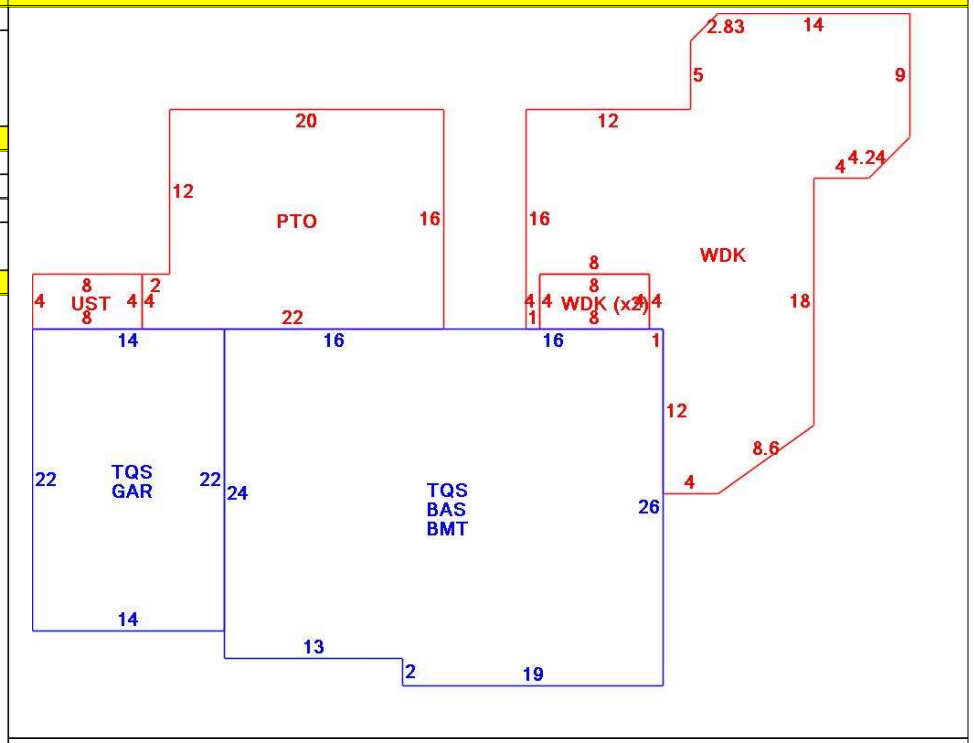

OB - OUTBUILDING & YARD ITEMS(L) / XF - BUILDING EXTRA FEATURES(B)

Code	Description	L/B	Units	Unit Price	Yr Blt	Cond. Cd	% Gd	Grade	Grade Adj.	Appr. Value
FPL2	Fireplace 1.5 s	B	1	6000.00	2006		88		0.00	5,300
SPL2	Pool Vinyl	L	650	55.00	1994		50	00	1.00	17,100
BFA1	Bsmt Fin-Goo	B	250	32.56	2006		88		0.00	7,200
SHED	Shed	L	336	18.00	1999		60		0.00	3,600
WDC	Wood Decking	L	72	20.00	1999		60		0.00	2,000
WDC	Wood Decking	L	623	20.00	1999		60		0.00	6,900
PAT2	Patio-Good	L	328	9.94	1999		80		0.00	2,600
GAR	Attached Gara	B	308	40.00	2006		88		0.00	12,000
UST	Utility Storage-	B	32	17.11	2006		88		0.00	500
BMT	Basement-Unfi	B	806	26.01	2006		88		0.00	20,000

BUILDING SUB-AREA SUMMARY SECTION

Code	Description	Living Area	Floor Area	Eff Area	Unit Cost	Undeprec Value
BAS	First Floor	806	806	806	291.84	235,224
BMT	Basement Area	0	806	0	0.00	0
GAR	Attached Garage	0	308	0	0.00	0
PTO	Patio	0	328	0	0.00	0
TQS	Three Quarter Story	724	1,114	724	189.67	211,293
UST	Utility Enclosure	0	32	0	0.00	0
WDK	Wood Deck	0	623	0	0.00	0
	Ttl Gross Liv / Lease Area	1,530	4,017	1,530		446,517

Property Location 56 BRALEY JENKINS ROAD | Map ID 171/ 185/ / / | Bldg Name | State Use 1010
Vision ID 11660 | Account # 372554 | Bldg # 1 | Sec # 1 of 1 | Card # 2 of 2 | Print Date 2/1/2024 10:16:06 AM

CURRENT OWNER

MESIALIDES, STYLIANOS

56 BRALEY JENKINS ROAD

CENTERVILLE MA 02632

TOPO		UTILITIES		STRT / ROAD		LOCATION	
1	Level	2	Public Water	1	Paved		
		4	Gas				
		6	Septic				

SUPPLEMENTAL DATA

Alt Prcl ID		Plan Ref.	306/17-24 (P 22)
Split Zonin		Land Ct#	
BID Parcel		#SR	
ResExpt Q		Life Estate	
#DL 1	LOT 152	PP STATU	
#DL 2			
GIS ID	F_966681_2705879	Assoc Pid#	

CURRENT ASSESSMENT

Description	Code	Assessed	Assessed
RESIDNTL	1010	476,800	476,800
RES LAND	1010	152,200	152,200
	Total	629,000	629,000

801

FY2024
BARNSTABLE, MA

VISION

RECORD OF OWNERSHIP

BK-VOL/PAGE		SALE DATE	Q/U	V/I	SALE PRIC	VC

PREVIOUS ASSESSMENTS (HISTORY)

Year	Code	Assessed	Year	Code	Assessed V	Year	Code	Assessed
2023	1010	427,100	2022	1010	368,200	2021	1010	288,300
	1010	138,400		1010	102,500		1010	102,500
							1010	34,500
	Total	565,500		Total	470,700		Total	425,300

EXEMPTIONS

Year	Code	Description	Amount
		Total	

OTHER ASSESSMENTS

Code	Description	Number	Amount	Comm Int

This signature acknowledges a visit by a Data Collector or Assessor

ASSESSING NEIGHBORHOOD

Nbhd	Nbhd Name	B	Tracing	Batch
0105				CENVIL

NOTES

APPRAISED VALUE SUMMARY

Appraised Bldg. Value (Card)	392,900
Appraised Xf (B) Value (Bldg)	49,400
Appraised Ob (B) Value (Bldg)	34,500
Appraised Land Value (Bldg)	152,200
Special Land Value	0
Total Appraised Parcel Value	629,000
Valuation Method	C
Total Appraised Parcel Value	629,000

BUILDING PERMIT RECORD

Permit Id	Issue Date	Type	Description	Amount	Insp Date	% Comp	Date Comp	Comments

VISIT / CHANGE HISTORY

Date	Id	Type	Is	Cd	Purpost/Result

LAND LINE VALUATION SECTION

B	Use Code	Description	Zone	LA	Land Units		Unit Price	Size Adj	AC Disc	Site Index	Cond.	Nbhd.	Nbhd. Adj	Notes	Location Adjustmen		Adj Unit P	Land Value

Total Card Land Units | Parcel Total Land Area | Total Land Value

Property Location 56 BRALEY JENKINS ROAD | Map ID 171/ 185/ / / | Bldg Name | State Use 1010
Vision ID 11660 | Account # 372554 | Bldg # 1 | Sec # 1 of 1 | Card # 2 of 2 | Print Date 2/1/2024 10:16:07 AM

CONSTRUCTION DETAIL

Element	Cd	Description
Style	04	Cape Cod
Model	01	Residential
Grade:	C+	Average Plus
Stories	1.75	1 3/4 Stories
Exterior Wall 1	14	Wood Shingle
Exterior Wall 2	11	Clapboard
Roof Structure	03	Gable/Hip
Roof Cover	03	Asph/F Gls/Cmp
Interior Wall 1	05	Drywall
Interior Wall 2		
Interior Floor 1	14	Carpet
Interior Floor 2	12	Hardwood
Heat Fuel	03	Gas
Heat Type	04	Hot Air
AC Type	03	Central
Bedrooms	03	3 Bedrooms
Full Baths	2	
Half Baths	1	
Extra Fixtures		
Total Rooms	5	
Bath Style		
Kitchen Style		
Occupancy		
Usrfld 105		
Accessory Apt		
Foundation Alt	01	Poured Conc.
Rms Prts		
Bath Split	21	2 Full-1 Half

CONSTRUCTION DETAIL (CONTINUED)

Element	Cd	Description

CONDO DATA

Parcel Id		C		Owne	0.0
		B		S	

Adjust Type	Code	Description	Factor%
Condo Flr			
Condo Unit			

COST / MARKET VALUATION

Building Value New	
Year Built	
Effective Year Built	
Depreciation Code	
Remodel Rating	
Year Remodeled	
Depreciation %	
Functional Obsol	
External Obsol	
Trend Factor	
Condition	
Condition %	
Percent Good	
RCNLD	
Dep % Ovr	
Dep Ovr Comment	
Misc Imp Ovr	
Misc Imp Ovr Comment	
Cost to Cure Ovr	
Cost to Cure Ovr Comment	

OB - OUTBUILDING & YARD ITEMS(L) / XF - BUILDING EXTRA FEATURES(B)

Code	Description	L/B	Units	Unit Price	Yr Blt	Cond. Cd	% Gd	Grade	Grade Adj.	Appr. Value
PAT1	Patio- Average	L	550	5.89	1994		75		0.00	2,300
FPLG	Gas Fireplace-	B	1	2500.00	2006		88		0.00	2,200
FPLG	Gas Fireplace-	B	1	2500.00	2006		88		0.00	2,200

BUILDING SUB-AREA SUMMARY SECTION

Code	Description	Living Area	Floor Area	Eff Area	Unit Cost	Undeprec Value
	Ttl Gross Liv / Lease Area					