Property Location 1 HENRY F LORING ROAD | Map ID 172/ 214/ / / | Bldg Name | State Use 1010
Vision ID 11959 | Account # 102944 | Bldg # 1 | Sec # 1 of 1 | Card # 1 of 2 | Print Date 2/1/2024 10:52:01 AM

CURRENT OWNER

NEARY, PAUL C & EILEEN A

1 HENRY F LORING RD

CENTERVILLE MA 02632

TOPO		UTILITIES		STRT / ROAD		LOCATION	
1	Level	6	Septic	1	Paved		
		4	Gas				
		2	Public Water				

SUPPLEMENTAL DATA

Alt Prcl ID		Plan Ref.	343/84-86
Split Zonin		Land Ct#	
BID Parcel		#SR	
ResExpt Q	YES:	Life Estate	NEARY, PAUL & E
#DL 1	LOT 22	PP STATU	
#DL 2			
GIS ID	F_965883_2707766	Assoc Pid#	

CURRENT ASSESSMENT

Description	Code	Assessed	Assessed
RESIDNTL	1010	614,700	614,700
RES LAND	1010	153,600	153,600
Total		768,300	768,300

801

FY2024
BARNSTABLE, MA

VISION

RECORD OF OWNERSHIP

	BK-VOL/PAGE		SALE DATE	Q/U	V/I	SALE PRIC	VC
NEARY, PAUL C & EILEEN A	16104	0124	12-18-2002	U	I	1	1A
NEARY, PAUL C TR	13526	0220	01-31-2001	U	I	1	1F
NEARY, PAUL C JR & EILEEN A	3946	0218	12-15-1983	Q	V	58,000	00

PREVIOUS ASSESSMENTS (HISTORY)

Year	Code	Assessed	Year	Code	Assessed V	Year	Code	Assessed
2023	1010	559,100	2022	1010	481,300	2021	1010	331,100
	1010	139,600		1010	103,400		1010	103,400
							1010	90,300
	Total	698,700		Total	584,700		Total	524,800

EXEMPTIONS

Year	Code	Description	Amount
2011	5C	RESIDENTIAL EXEMPTION	0.00
		Total	0.00

OTHER ASSESSMENTS

Code	Description	Number	Amount	Comm Int

This signature acknowledges a visit by a Data Collector or Assessor

APPRAISED VALUE SUMMARY

Appraised Bldg. Value (Card)	483,400
Appraised Xf (B) Value (Bldg)	41,000
Appraised Ob (B) Value (Bldg)	90,300
Appraised Land Value (Bldg)	153,600
Special Land Value	0
Total Appraised Parcel Value	768,300
Valuation Method	C
Total Appraised Parcel Value	768,300

ASSESSING NEIGHBORHOOD

Nbhd	Nbhd Name	B	Tracing	Batch
0105				CENVIL

NOTES

BUILDING PERMIT RECORD

Permit Id	Issue Date	Type	Description	Amount	Insp Date	% Comp	Date Comp	Comments
18-2194	08-09-2018	804	Addn Alt-Res	100,000	03-11-2020	100	06-30-2020	CONVERT EXISTING GARAG
18-2197	07-16-2018	833	Shd-Res-under	0	04-01-2019	100	06-30-2019	12x16
38919	06-07-1999	SP	Swimming Pool	15,000	01-01-2000	100	01-01-2000	
B30887	06-01-1987	AD	Addition	5,000	01-15-1988	100	12-31-1988	CE ADD'N

VISIT / CHANGE HISTORY

Date	Id	Type	Is	Cd	Purpost/Result
05-21-2020	LS			FR	Field Review
05-19-2020	SR	02		02	Bldg Permit Completed
04-01-2019	SR	03		13	CALL BACK
05-10-2017	KM	02		03	Cycl Insp Comp
03-30-2011	NF	03		03	Cycl Insp Comp
09-05-2008	PT	02		14	Cyclical Inspection
02-18-2000	PT			10	Desk Aerial Review

LAND LINE VALUATION SECTION

B	Use Code	Description	Zone	LA	Land Units		Unit Price	Size Adj	AC Disc	Site Index	Cond.	Nbhd.	Nbhd. Adj	Notes	Location Adjustmen	Adj Unit P	Land Value
1	1010	Single Fam M-0	RC	3	0.390	AC	176,344.00	2.23277	1.0000	5	1.00	0105	1.000		1.0000	393,740.8	153,600

Total Card Land Units 0.39 AC | Parcel Total Land Area 0.39 | Total Land Value 153,600

Property Location 1 HENRY F LORING ROAD | Map ID 172/ 214/ / / | Bldg Name | State Use 1010
Vision ID 11959 | Account # 102944 | Bldg # 1 | Sec # 1 of 1 | Card # 1 of 2 | Print Date 2/1/2024 10:52:01 AM

CONSTRUCTION DETAIL

Element	Cd	Description
Style	04	Cape Cod
Model	01	Residential
Grade:	C	Average
Stories	1.75	1 3/4 Stories
Exterior Wall 1	14	Wood Shingle
Exterior Wall 2		
Roof Structure	03	Gable/Hip
Roof Cover	03	Asph/F Gls/Cmp
Interior Wall 1	05	Drywall
Interior Wall 2		
Interior Floor 1	14	Carpet
Interior Floor 2	12	Hardwood
Heat Fuel	03	Gas
Heat Type	05	Hot Water
AC Type	01	None
Bedrooms	03	3 Bedrooms
Full Baths	2	
Half Baths	0	
Extra Fixtures		
Total Rooms	9	9 Rooms
Bath Style		
Kitchen Style		
Occupancy		
Usrfld 105		
Accessory Apt		
Foundation Alt	01	Poured Conc.
Rms Prts		
Bath Split	20	2 Full-0 Half

CONSTRUCTION DETAIL (CONTINUED)

Element	Cd	Description

CONDO DATA

Parcel Id		C		Owne	0.0
		B		S	

Adjust Type	Code	Description	Factor%
Condo Flr			
Condo Unit			

COST / MARKET VALUATION

Building Value New	582,455
Year Built	1983
Effective Year Built	1997
Depreciation Code	A
Remodel Rating	
Year Remodeled	
Depreciation %	17
Functional Obsol	0
External Obsol	0
Trend Factor	1
Condition	
Condition %	
Percent Good	83
RCNLD	483,400
Dep % Ovr	
Dep Ovr Comment	
Misc Imp Ovr	
Misc Imp Ovr Comment	
Cost to Cure Ovr	
Cost to Cure Ovr Comment	

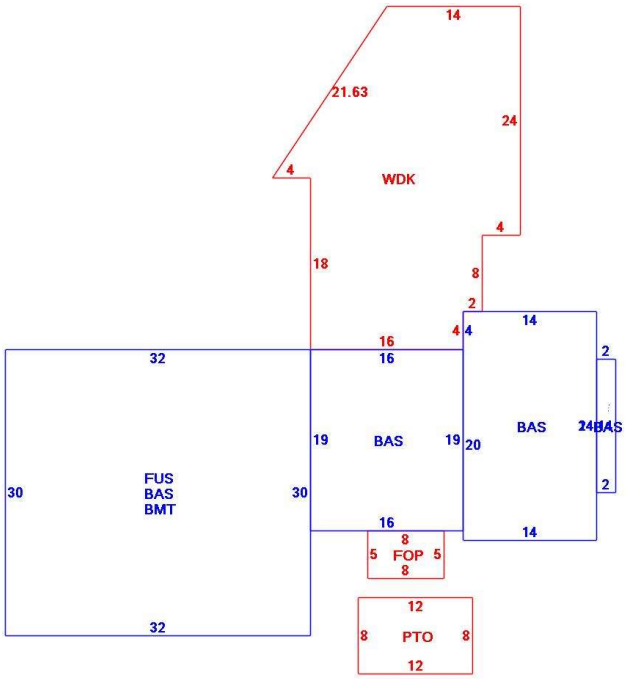

OB - OUTBUILDING & YARD ITEMS(L) / XF - BUILDING EXTRA FEATURES(B)

Code	Description	L/B	Units	Unit Price	Yr Blt	Cond. Cd	% Gd	Grade	Grade Adj.	Appr. Value
FPL2	Fireplace 1.5 s	B	1	6000.00	1999		83		0.00	5,000
BFA	Bsmt Fin-Avg	B	700	17.36	1999		83		0.00	10,100
SPL2	Pool Vinyl	L	800	55.00	2001		64	00	1.00	26,200
BMT	Basement-Unfi	B	960	26.01	1999		83		0.00	21,400
WDC	Deck composit	L	700	24.00	2018		98		0.00	15,100
SPH3	Pool Heater 80	L	1	4116.00	2018		98		0.00	4,000
SHED	Shed	L	192	18.00	2018		98		0.00	3,400
FPLO	Outdoor firepl -	L	1	13840.00	2018		99	C	1.00	13,700
PATF	Flagstone Pav	L	1,000	30.00	2018		99		0.00	26,700
FOP	Open Porch-ro	B	40	55.00	1999		83		0.00	2,400

BUILDING SUB-AREA SUMMARY SECTION

Code	Description	Living Area	Floor Area	Eff Area	Unit Cost	Undeprec Value
BAS	First Floor	1,628	1,628	1,628	225.06	366,398
BMT	Basement Area	0	960	0	0.00	0
FOP	Open Porch	0	40	0	0.00	0
FUS	Upper Story	960	960	960	225.06	216,058
PTO	Patio	0	96	0	0.00	0
WDK	Wood Deck	0	700	0	0.00	0
	Ttl Gross Liv / Lease Area	2,588	4,384	2,588		582,456

Property Location 1 HENRY F LORING ROAD | Map ID 172/ 214/ / / | Bldg Name | State Use 1010
Vision ID 11959 | Account # 102944 | Bldg # 1 | Sec # 1 of 1 | Card # 2 of 2 | Print Date 2/1/2024 10:52:01 AM

CURRENT OWNER

NEARY, PAUL C & EILEEN A

1 HENRY F LORING RD

CENTERVILLE MA 02632

TOPO		UTILITIES		STRT / ROAD		LOCATION	
1	Level	6	Septic	1	Paved		
		4	Gas				
		2	Public Water				

SUPPLEMENTAL DATA

Alt Prcl ID		Plan Ref.	343/84-86
Split Zonin		Land Ct#	
BID Parcel		#SR	
ResExpt Q	YES:	Life Estate	NEARY, PAUL & E
#DL 1	LOT 22	PP STATU	
#DL 2			
GIS ID	F_965883_2707766	Assoc Pid#	

CURRENT ASSESSMENT

Description	Code	Assessed	Assessed
RESIDNTL	1010	614,700	614,700
RES LAND	1010	153,600	153,600
	Total	768,300	768,300

801

FY2024
BARNSTABLE, MA

VISION

RECORD OF OWNERSHIP

BK-VOL/PAGE		SALE DATE	Q/U	V/I	SALE PRIC	VC

PREVIOUS ASSESSMENTS (HISTORY)

Year	Code	Assessed	Year	Code	Assessed V	Year	Code	Assessed
2023	1010	559,100	2022	1010	481,300	2021	1010	331,100
	1010	139,600		1010	103,400		1010	103,400
							1010	90,300
	Total	698,700		Total	584,700		Total	524,800

EXEMPTIONS

Year	Code	Description	Amount
		Total	

OTHER ASSESSMENTS

Code	Description	Number	Amount	Comm Int

This signature acknowledges a visit by a Data Collector or Assessor

ASSESSING NEIGHBORHOOD

Nbhd	Nbhd Name	B	Tracing	Batch
0105				CENVIL

NOTES

APPRAISED VALUE SUMMARY

Appraised Bldg. Value (Card)	483,400
Appraised Xf (B) Value (Bldg)	41,000
Appraised Ob (B) Value (Bldg)	90,300
Appraised Land Value (Bldg)	153,600
Special Land Value	0
Total Appraised Parcel Value	768,300
Valuation Method	C
Total Appraised Parcel Value	768,300

BUILDING PERMIT RECORD

Permit Id	Issue Date	Type	Description	Amount	Insp Date	% Comp	Date Comp	Comments

VISIT / CHANGE HISTORY

Date	Id	Type	Is	Cd	Purpost/Result

LAND LINE VALUATION SECTION

B	Use Code	Description	Zone	LA	Land Units		Unit Price	Size Adj	AC Disc	Site Index	Cond.	Nbhd.	Nbhd. Adj	Notes	Location Adjustmen		Adj Unit P	Land Value

Total Card Land Units | Parcel Total Land Area | Total Land Value

Property Location 1 HENRY F LORING ROAD | Map ID 172/ 214/ / / | Bldg Name | State Use 1010
Vision ID 11959 | Account # 102944 | Bldg # 1 | Sec # 1 of 1 | Card # 2 of 2 | Print Date 2/1/2024 10:52:01 AM

CONSTRUCTION DETAIL

Element	Cd	Description
Style	04	Cape Cod
Model	01	Residential
Grade:	C	Average
Stories	1.75	1 3/4 Stories
Exterior Wall 1	14	Wood Shingle
Exterior Wall 2		
Roof Structure	03	Gable/Hip
Roof Cover	03	Asph/F Gls/Cmp
Interior Wall 1	05	Drywall
Interior Wall 2		
Interior Floor 1	14	Carpet
Interior Floor 2	12	Hardwood
Heat Fuel	03	Gas
Heat Type	05	Hot Water
AC Type	01	None
Bedrooms	03	3 Bedrooms
Full Baths	2	
Half Baths	0	
Extra Fixtures		
Total Rooms	9	9 Rooms
Bath Style		
Kitchen Style		
Occupancy		
Usrfld 105		
Accessory Apt		
Foundation Alt	01	Poured Conc.
Rms Prts		
Bath Split	20	2 Full-0 Half

CONSTRUCTION DETAIL (CONTINUED)

Element	Cd	Description

CONDO DATA

Parcel Id		C		Owne	0.0
		B		S	

Adjust Type	Code	Description	Factor%
Condo Flr			
Condo Unit			

COST / MARKET VALUATION

Building Value New	
Year Built	
Effective Year Built	
Depreciation Code	
Remodel Rating	
Year Remodeled	
Depreciation %	
Functional Obsol	
External Obsol	
Trend Factor	
Condition	
Condition %	
Percent Good	
RCNLD	
Dep % Ovr	
Dep Ovr Comment	
Misc Imp Ovr	
Misc Imp Ovr Comment	
Cost to Cure Ovr	
Cost to Cure Ovr Comment	

OB - OUTBUILDING & YARD ITEMS(L) / XF - BUILDING EXTRA FEATURES(B)

Code	Description	L/B	Units	Unit Price	Yr Blt	Cond. Cd	% Gd	Grade	Grade Adj.	Appr. Value
PAT2	Patio-Good	L	96	9.94	2019		100		0.00	1,200
FPLG	Gas Fireplace-	B	1	2500.00	1999		83		0.00	2,100

BUILDING SUB-AREA SUMMARY SECTION

Code	Description	Living Area	Floor Area	Eff Area	Unit Cost	Undeprec Value
	Ttl Gross Liv / Lease Area					