Property Location 23 HAYWARD ROAD | Map ID 186/ 057/ / / | Bldg Name | State Use 1010
Vision ID 12575 | Account # 107173 | Bldg # 1 | Sec # 1 of 1 | Card # 1 of 2 | Print Date 2/1/2024 12:03:26 PM

CURRENT OWNER

LITTLETON, ROBERT F JR & -KOZMA

23 HAYWARD ROAD

CENTERVILLE MA 02632

TOPO / UTILITIES / STRT / ROAD / LOCATION

TOPO		UTILITIES		STRT / ROAD		LOCATION	
1	Level	2	Public Water	1	Paved	7	Waterfront
		4	Gas			1	Excel View
		6	Septic			9	Rear Location

SUPPLEMENTAL DATA

Alt Prcl ID		Plan Ref.	
Split Zonin		Land Ct#	13466-C
BID Parcel		#SR	
ResExpt Q	YES:	Life Estate	
#DL 1	LOT 2	PP STATU	
#DL 2			
GIS ID	F_970042_2694949	Assoc Pid#	

CURRENT ASSESSMENT

Description	Code	Assessed	Assessed
RESIDNTL	1010	643,500	643,500
RES LAND	1010	1,644,000	1,644,000
Total		2,287,500	2,287,500

801

FY2024
BARNSTABLE, MA

VISION

RECORD OF OWNERSHIP

	BK-VOL/PAGE		SALE DATE	Q/U	V/I	SALE PRIC	VC
LITTLETON, ROBERT F JR & -KOZMA, W	C221763	0	01-31-2020	U	I	1	1F
LITTLETON, ROBERT F JR&LITTLE-KOZ	C217759	0	11-02-2018	U	I	1	1A
LITTLETON, ROBERT F JR & LITTLETON	C214331	0	10-12-2017	U	I	1	1F
LITTLETON, ROBERT F JR & LITTLETON	C214243	0	10-02-2017	U	I	1	1F
LITTLETON, ROBERT F JR	C196845	0	04-18-2012	U	I	787,500	1S

PREVIOUS ASSESSMENTS (HISTORY)

Year	Code	Assessed	Year	Code	Assessed V	Year	Code	Assessed
2023	1010	528,300	2022	1010	467,500	2021	1010	302,700
	1010	1,294,300		1010	970,100		1010	998,700
							1010	119,400
	Total	1,822,600		Total	1,437,600		Total	1,420,800

EXEMPTIONS

Year	Code	Description	Amount
2020	5C	RESIDENTIAL EXEMPTION	0.00
		Total	0.00

OTHER ASSESSMENTS

Code	Description	Number	Amount	Comm Int

This signature acknowledges a visit by a Data Collector or Assessor

ASSESSING NEIGHBORHOOD

Nbhd	Nbhd Name	B	Tracing	Batch
0117				CENVIL

NOTES

APPRAISED VALUE SUMMARY

Appraised Bldg. Value (Card)	471,400
Appraised Xf (B) Value (Bldg)	49,000
Appraised Ob (B) Value (Bldg)	123,100
Appraised Land Value (Bldg)	1,644,000
Special Land Value	0
Total Appraised Parcel Value	2,287,500
Valuation Method	C
Total Appraised Parcel Value	2,287,500

BUILDING PERMIT RECORD

Permit Id	Issue Date	Type	Description	Amount	Insp Date	% Comp	Date Comp	Comments
BLDR-21-21	03-03-2021	804	Addn Alt-Res	36	06-30-2022	100	06-30-2022	I reside at 23 Hayward Road,
201405763	09-15-2014	DK	Dock	41,150	06-30-2015	100	06-30-2015	DK 4X75 BRDWLK,4X56 PIE
201400693	02-07-2014	RE	Remodel	45,000	10-14-2014	100	06-30-2014	REMOD BD/BTH/KIT
201202261	04-20-2012	NS	New Siding	5,000	06-30-2012	100	06-30-2012	RESIDE

VISIT / CHANGE HISTORY

Date	Id	Type	Is	Cd	Purpost/Result
08-25-2022	SR	02		02	Bldg Permit Completed
05-14-2020	WD			FR	Field Review
02-19-2020	PK	03		16	In Office Review
07-20-2015	TP	03		16	In Office Review
01-09-2015	NF	03		16	In Office Review
01-08-2015	MW	02		13	CALL BACK
08-07-2014	JR	03		16	In Office Review

LAND LINE VALUATION SECTION

B	Use Code	Description	Zone	LA	Land Units		Unit Price	Size Adj	AC Disc	Site Index	Cond.	Nbhd.	Nbhd. Adj	Notes	Location Adjustmen	Adj Unit P	Land Value
1	1010	Single Fam M-0	CBD	3	0.690	AC	176,344.00	1.39292	1.0000	5	1.00	0117	9.700		1.0000	2,382,654	1,644,000

Total Card Land Units 0.69 AC | Parcel Total Land Area 0.69 | Total Land Value 1,644,000

Property Location 23 HAYWARD ROAD | Map ID 186/ 057/ / / | Bldg Name | State Use 1010
Vision ID 12575 | Account # 107173 | Bldg # 1 | Sec # 1 of 1 | Card # 1 of 2 | Print Date 2/1/2024 12:03:26 PM

CONSTRUCTION DETAIL

Element	Cd	Description
Style	07	Modern/Contemp
Model	01	Residential
Grade:	C	Average
Stories	1.5	1 1/2 Stories
Exterior Wall 1	14	Wood Shingle
Exterior Wall 2		
Roof Structure	03	Gable/Hip
Roof Cover	03	Asph/F Gls/Cmp
Interior Wall 1	05	Drywall
Interior Wall 2		
Interior Floor 1	12	Hardwood
Interior Floor 2	14	Carpet
Heat Fuel	03	Gas
Heat Type	05	Hot Water
AC Type	03	Central
Bedrooms	03	3 Bedrooms
Full Baths	3	
Half Baths	0	
Extra Fixtures		
Total Rooms	8	8 Rooms
Bath Style		
Kitchen Style		
Occupancy		
Usrfld 105		
Accessory Apt		
Foundation Alt	01	Poured Conc.
Rms Prts		
Bath Split	30	3 Full-0 Half

CONSTRUCTION DETAIL (CONTINUED)

Element	Cd	Description

CONDO DATA

Parcel Id		C		Owne	0.0
		B		S	

Adjust Type	Code	Description	Factor%
Condo Flr			
Condo Unit			

COST / MARKET VALUATION

Building Value New	574,873
Year Built	1980
Effective Year Built	1996
Depreciation Code	A
Remodel Rating	
Year Remodeled	
Depreciation %	18
Functional Obsol	0
External Obsol	0
Trend Factor	1
Condition	
Condition %	
Percent Good	82
RCNLD	471,400
Dep % Ovr	
Dep Ovr Comment	
Misc Imp Ovr	
Misc Imp Ovr Comment	
Cost to Cure Ovr	
Cost to Cure Ovr Comment	

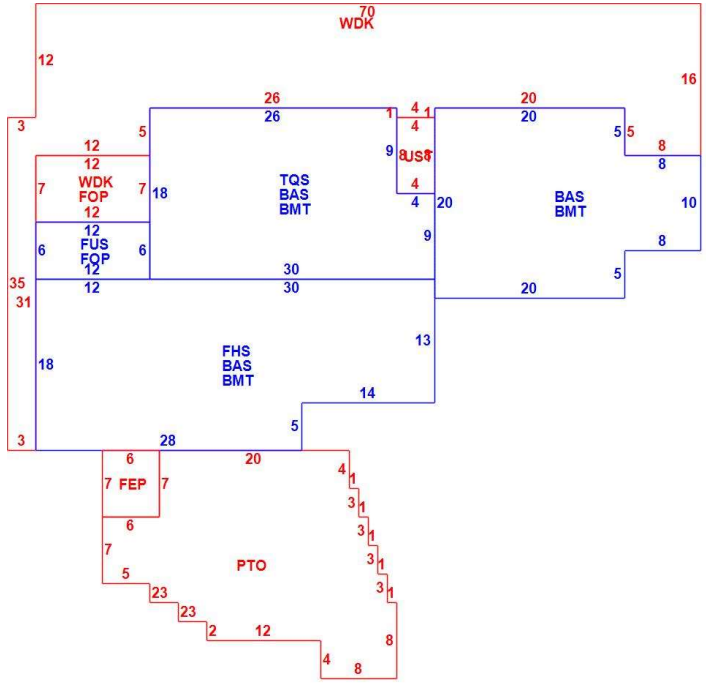

OB - OUTBUILDING & YARD ITEMS(L) / XF - BUILDING EXTRA FEATURES(B)

Code	Description	L/B	Units	Unit Price	Yr Blt	Cond. Cd	% Gd	Grade	Grade Adj.	Appr. Value
FPLG	Gas Fireplace-	B	2	2500.00	1998		82		0.00	4,100
BGR2	2 Stall Bmt Ga	B	1	3244.00	1998		82		0.00	2,700
DKAV	Dock-Ave	L	1	100000.0	2014		90		0.00	90,000
WDC	Wood Decking	L	958	20.00	1998		58		0.00	10,000
FOP	Open Porch-ro	B	156	55.00	1998		82		0.00	6,200
BMT	Basement-Unfi	B	1,670	26.01	1998		82		0.00	31,500
WDC	Wood Deck w/	L	105	18.00	1998		58		0.00	1,800
UST	Utility Storage-	B	32	17.11	1998		82		0.00	500
PATF	Flagstone Pav	L	512	30.00	2014		95		0.00	14,100
STRS	Stairs to Water	L	6	122.52	1982		26	C	1.00	200

BUILDING SUB-AREA SUMMARY SECTION

Code	Description	Living Area	Floor Area	Eff Area	Unit Cost	Undeprec Value
BAS	First Floor	1,670	1,670	1,670	238.24	397,861
BMT	Basement Area	0	1,670	0	0.00	0
FEP	Enclosed Porch	0	42	0	0.00	0
FHS	Half Story	343	686	343	119.12	81,716
FOP	Open Porch	0	156	0	0.00	0
FUS	Upper Story	72	72	72	238.24	17,153
PTO	Patio	0	512	0	0.00	0
TQS	Three Quarter Story	328	504	328	155.05	78,143
UST	Utility Enclosure	0	32	0	0.00	0
WDK	Wood Deck	0	1,063	0	0.00	0
	Ttl Gross Liv / Lease Area	2,413	6,407	2,413		574,873

Property Location 23 HAYWARD ROAD | Map ID 186/ 057/ / / | Bldg Name | State Use 1010
Vision ID 12575 | Account # 107173 | Bldg # 1 | Sec # 1 of 1 | Card # 2 of 2 | Print Date 2/1/2024 12:03:27 PM

CURRENT OWNER

LITTLETON, ROBERT F JR & -KOZMA

23 HAYWARD ROAD

CENTERVILLE MA 02632

TOPO		UTILITIES		STRT / ROAD		LOCATION	
1	Level	2	Public Water	1	Paved	7	Waterfront
		4	Gas			1	Excel View
		6	Septic			9	Rear Location

SUPPLEMENTAL DATA

Alt Prcl ID		Plan Ref.	
Split Zonin		Land Ct#	13466-C
BID Parcel		#SR	
ResExpt Q	YES:	Life Estate	
#DL 1	LOT 2	PP STATU	
#DL 2			
GIS ID	F_970042_2694949	Assoc Pid#	

CURRENT ASSESSMENT

Description	Code	Assessed	Assessed
RESIDNTL	1010	643,500	643,500
RES LAND	1010	1,644,000	1,644,000
	Total	2,287,500	2,287,500

801

FY2024
BARNSTABLE, MA

VISION

RECORD OF OWNERSHIP

BK-VOL/PAGE		SALE DATE	Q/U	V/I	SALE PRIC	VC

PREVIOUS ASSESSMENTS (HISTORY)

Year	Code	Assessed	Year	Code	Assessed V	Year	Code	Assessed
2023	1010	528,300	2022	1010	467,500	2021	1010	302,700
	1010	1,294,300		1010	970,100		1010	998,700
							1010	119,400
	Total	1,822,600		Total	1,437,600		Total	1,420,800

EXEMPTIONS

Year	Code	Description	Amount
		Total	

OTHER ASSESSMENTS

Code	Description	Number	Amount	Comm Int

This signature acknowledges a visit by a Data Collector or Assessor

ASSESSING NEIGHBORHOOD

Nbhd	Nbhd Name	B	Tracing	Batch
0117				CENVIL

NOTES

APPRAISED VALUE SUMMARY

Appraised Bldg. Value (Card)	471,400
Appraised Xf (B) Value (Bldg)	49,000
Appraised Ob (B) Value (Bldg)	123,100
Appraised Land Value (Bldg)	1,644,000
Special Land Value	0
Total Appraised Parcel Value	2,287,500
Valuation Method	C
Total Appraised Parcel Value	2,287,500

BUILDING PERMIT RECORD

Permit Id	Issue Date	Type	Description	Amount	Insp Date	% Comp	Date Comp	Comments

VISIT / CHANGE HISTORY

Date	Id	Type	Is	Cd	Purpost/Result

LAND LINE VALUATION SECTION

B	Use Code	Description	Zone	LA	Land Units		Unit Price	Size Adj	AC Disc	Site Index	Cond.	Nbhd.	Nbhd. Adj	Notes	Location Adjustmen		Adj Unit P	Land Value

Total Card Land Units | Parcel Total Land Area | Total Land Value

Property Location 23 HAYWARD ROAD | Map ID 186/ 057/ / / | Bldg Name | State Use 1010
Vision ID 12575 | Account # 107173 | Bldg # 1 | Sec # 1 of 1 | Card # 2 of 2 | Print Date 2/1/2024 12:03:27 PM

CONSTRUCTION DETAIL

Element	Cd	Description
Style	07	Modern/Contemp
Model	01	Residential
Grade:	C	Average
Stories	1.5	1 1/2 Stories
Exterior Wall 1	14	Wood Shingle
Exterior Wall 2		
Roof Structure	03	Gable/Hip
Roof Cover	03	Asph/F Gls/Cmp
Interior Wall 1	05	Drywall
Interior Wall 2		
Interior Floor 1	12	Hardwood
Interior Floor 2	14	Carpet
Heat Fuel	03	Gas
Heat Type	05	Hot Water
AC Type	03	Central
Bedrooms	03	3 Bedrooms
Full Baths	3	
Half Baths	0	
Extra Fixtures		
Total Rooms	8	8 Rooms
Bath Style		
Kitchen Style		
Occupancy		
Usrfld 105		
Accessory Apt		
Foundation Alt	01	Poured Conc.
Rms Prts		
Bath Split	30	3 Full-0 Half

CONSTRUCTION DETAIL (CONTINUED)

Element	Cd	Description

CONDO DATA

Parcel Id		C		Owne	0.0
		B		S	

Adjust Type	Code	Description	Factor%
Condo Flr			
Condo Unit			

COST / MARKET VALUATION

Building Value New	
Year Built	
Effective Year Built	
Depreciation Code	
Remodel Rating	
Year Remodeled	
Depreciation %	
Functional Obsol	
External Obsol	
Trend Factor	
Condition	
Condition %	
Percent Good	
RCNLD	
Dep % Ovr	
Dep Ovr Comment	
Misc Imp Ovr	
Misc Imp Ovr Comment	
Cost to Cure Ovr	
Cost to Cure Ovr Comment	

OB - OUTBUILDING & YARD ITEMS(L) / XF - BUILDING EXTRA FEATURES(B)

Code	Description	L/B	Units	Unit Price	Yr Blt	Cond. Cd	% Gd	Grade	Grade Adj.	Appr. Value
WDC	Wood Deck w/	L	144	18.00	2014		90		0.00	3,300
FEP	Enclosed porc	B	42	70.00	1998		82		0.00	4,000
FPIT	Fire Pit	L	1	3010.00	2014		95	C	1.00	2,900
SHED	Shed	L	80	18.00	1997		56		0.00	800

BUILDING SUB-AREA SUMMARY SECTION

Code	Description	Living Area	Floor Area	Eff Area	Unit Cost	Undeprec Value
	Ttl Gross Liv / Lease Area					