Property Location 78 BELDAN LANE | Map ID 189/ 031/ 009/ / | Bldg Name | State Use 1010
Vision ID 12945 | Account # 110338 | Bldg # 1 | Sec # 1 of 1 | Card # 1 of 1 | Print Date 2/1/2024 12:48:54 PM

| CURRENT OWNER | TOPO | UTILITIES | STRT / ROAD | LOCATION |
|---|---|---|---|---|
| SYLVIA, LORI | 1 Level | 2 Public Water | 1 Paved | |
| | | 4 Gas | | |
| 78 BELDAN LANE | | 6 Septic | | |
| CENTERVILLE MA 02632 | | | | |

**SUPPLEMENTAL DATA**

| | | | |
|---|---|---|---|
| Alt Prcl ID | | Plan Ref. | 340/46 |
| Split Zonin | | Land Ct# | |
| BID Parcel | | #SR | |
| ResExpt Q | YES: | Life Estate | |
| #DL 1 | LOT 9 | PP STATU | |
| #DL 2 | | | |
| GIS ID | F_968384_2702442 | Assoc Pid# | |

**CURRENT ASSESSMENT**

| Description | Code | Assessed | Assessed |
|---|---|---|---|
| RESIDNTL | 1010 | 507,400 | 507,400 |
| RES LAND | 1010 | 158,000 | 158,000 |
| Total | | 665,400 | 665,400 |

801
FY2024
BARNSTABLE, MA

**VISION**

**RECORD OF OWNERSHIP**

| | BK-VOL/PAGE | | SALE DATE | Q/U | V/I | SALE PRIC | VC |
|---|---|---|---|---|---|---|---|
| SYLVIA, LORI | 10035 | 0325 | 01-30-1996 | Q | I | 90,000 | U |
| GUIOD, GRACE K | 3197 | 0257 | 11-21-1980 | U | | 0 | |

**PREVIOUS ASSESSMENTS (HISTORY)**

| Year | Code | Assessed | Year | Code | Assessed V | Year | Code | Assessed |
|---|---|---|---|---|---|---|---|---|
| 2023 | 1010 | 434,000 | 2022 | 1010 | 376,400 | 2021 | 1010 | 297,600 |
| | 1010 | 143,600 | | 1010 | 106,400 | | 1010 | 106,400 |
| | | | | | | | 1010 | 8,000 |
| | Total | 577,600 | | Total | 482,800 | | Total | 412,000 |

**EXEMPTIONS**

| Year | Code | Description | Amount |
|---|---|---|---|
| 2010 | 5C | RESIDENTIAL EXEMPTION | 0.00 |
| | | Total | 0.00 |

**OTHER ASSESSMENTS**

| Code | Description | Number | Amount | Comm Int |
|---|---|---|---|---|
| | | | | |

This signature acknowledges a visit by a Data Collector or Assessor

**APPRAISED VALUE SUMMARY**

| | |
|---|---|
| Appraised Bldg. Value (Card) | 461,600 |
| Appraised Xf (B) Value (Bldg) | 37,800 |
| Appraised Ob (B) Value (Bldg) | 8,000 |
| Appraised Land Value (Bldg) | 158,000 |
| Special Land Value | 0 |
| Total Appraised Parcel Value | 665,400 |
| Valuation Method | C |
| Total Appraised Parcel Value | 665,400 |

**ASSESSING NEIGHBORHOOD**

| Nbhd | Nbhd Name | B | Tracing | Batch |
|---|---|---|---|---|
| 0105 | | | | CENVIL |

**NOTES**

**BUILDING PERMIT RECORD**

| Permit Id | Issue Date | Type | Description | Amount | Insp Date | % Comp | Date Comp | Comments |
|---|---|---|---|---|---|---|---|---|
| 61410 | 05-15-2002 | NR | New Roof | 3,000 | 10-21-2002 | 100 | 01-01-2003 | |
| 33171 | 09-08-1999 | AD | Addition | 35,000 | 07-01-1999 | 100 | 01-01-2001 | |

**VISIT / CHANGE HISTORY**

| Date | Id | Type | Is | Cd | Purpost/Result |
|---|---|---|---|---|---|
| 06-05-2020 | LS | | | FR | Field Review |
| 05-25-2016 | KM | 02 | | 03 | Cycl Insp Comp |
| 12-17-2008 | PT | 02 | | 14 | Cyclical Inspection |
| 10-21-2002 | MF | 04 | | 44 | Drive by inspection only |
| 01-13-2001 | MF | 01 | | 00 | Meas/Listed-Interior Acces |
| 05-22-2000 | MF | 01 | | 00 | Meas/Listed-Interior Acces |
| 06-01-1997 | LK | 01 | | 00 | Meas/Listed-Interior Acces |

**LAND LINE VALUATION SECTION**

| B | Use Code | Description | Zone | LA | Land Units | | Unit Price | Size Adj | AC Disc | Site Index | Cond. | Nbhd. | Nbhd. Adj | Notes | Location Adjustmen | Adj Unit P | Land Value |
|---|---|---|---|---|---|---|---|---|---|---|---|---|---|---|---|---|---|
| 1 | 1010 | Single Fam M-0 | RC | 3 | 0.510 | AC | 176,344.00 | 1.75655 | 1.0000 | 5 | 1.00 | 0105 | 1.000 | | 1.0000 | 309,765.8 | 158,000 |

Total Card Land Units 0.51 AC | Parcel Total Land Area 0.51 | Total Land Value 158,000

Property Location 78 BELDAN LANE | Map ID 189/ 031/ 009/ / | Bldg Name | State Use 1010
Vision ID 12945 | Account # 110338 | Bldg # 1 | Sec # 1 of 1 | Card # 1 of 1 | Print Date 2/1/2024 12:48:54 PM

## CONSTRUCTION DETAIL

| Element | Cd | Description |
|---|---|---|
| Style | 01 | Ranch |
| Model | 01 | Residential |
| Grade: | C+ | Average Plus |
| Stories | 2 | 2 Stories |
| Exterior Wall 1 | 14 | Wood Shingle |
| Exterior Wall 2 | | |
| Roof Structure | 03 | Gable/Hip |
| Roof Cover | 03 | Asph/F Gls/Cmp |
| Interior Wall 1 | 05 | Drywall |
| Interior Wall 2 | | |
| Interior Floor 1 | 14 | Carpet |
| Interior Floor 2 | 12 | Hardwood |
| Heat Fuel | 03 | Gas |
| Heat Type | 04 | Hot Air |
| AC Type | 03 | Central |
| Bedrooms | 04 | 4 Bedrooms |
| Full Baths | 3 | |
| Half Baths | 0 | |
| Extra Fixtures | | |
| Total Rooms | 8 | 8 Rooms |
| Bath Style | | |
| Kitchen Style | | |
| Occupancy | | |
| Usrfld 105 | | |
| Accessory Apt | | |
| Foundation Alt | 01 | Poured Conc. |
| Rms Prts | | |
| Bath Split | 30 | 3 Full-0 Half |

## CONSTRUCTION DETAIL (CONTINUED)

| Element | Cd | Description |
|---|---|---|
| | | |

## CONDO DATA

| Parcel Id | | C | | Owne | 0.0 |
|---|---|---|---|---|---|
| | | B | | S | |

| Adjust Type | Code | Description | Factor% |
|---|---|---|---|
| Condo Flr | | | |
| Condo Unit | | | |

## COST / MARKET VALUATION

| | |
|---|---|
| Building Value New | 562,939 |
| Year Built | 1980 |
| Effective Year Built | 1996 |
| Depreciation Code | A |
| Remodel Rating | |
| Year Remodeled | |
| Depreciation % | 18 |
| Functional Obsol | 0 |
| External Obsol | 0 |
| Trend Factor | 1 |
| Condition | |
| Condition % | |
| Percent Good | 82 |
| RCNLD | 461,600 |
| Dep % Ovr | |
| Dep Ovr Comment | |
| Misc Imp Ovr | |
| Misc Imp Ovr Comment | |
| Cost to Cure Ovr | |
| Cost to Cure Ovr Comment | |

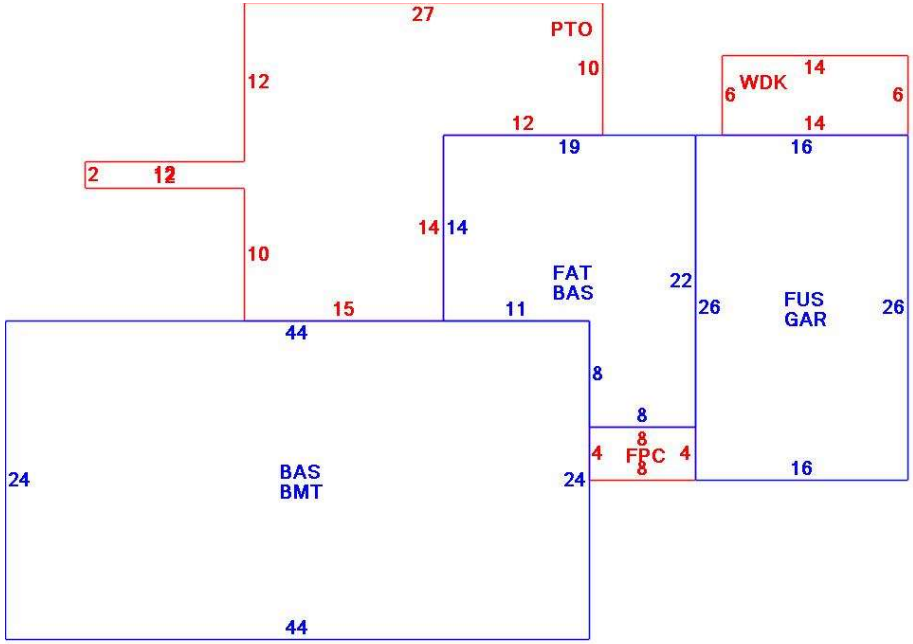


## OB - OUTBUILDING & YARD ITEMS(L) / XF - BUILDING EXTRA FEATURES(B)

| Code | Description | L/B | Units | Unit Price | Yr Blt | Cond. Cd | % Gd | Grade | Grade Adj. | Appr. Value |
|---|---|---|---|---|---|---|---|---|---|---|
| FOPC | Open Prch-roo | B | 32 | 55.00 | 1998 | | 82 | | 0.00 | 1,700 |
| GAR | Attached Gara | B | 416 | 40.00 | 1998 | | 82 | | 0.00 | 13,500 |
| BMT | Basement-Unfi | B | 1,056 | 26.01 | 1998 | | 82 | | 0.00 | 22,600 |
| WDC | Wood Decking | L | 84 | 20.00 | 2016 | | 94 | | 0.00 | 3,300 |
| PAT2 | Patio-Good | L | 504 | 9.94 | 2016 | | 97 | | 0.00 | 4,700 |

## BUILDING SUB-AREA SUMMARY SECTION

| Code | Description | Living Area | Floor Area | Eff Area | Unit Cost | Undeprec Value |
|---|---|---|---|---|---|---|
| BAS | First Floor | 1,386 | 1,386 | 1,386 | 303.96 | 421,293 |
| BMT | Basement Area | 0 | 1,056 | 0 | 0.00 | 0 |
| FAT | Attic, Finished | 50 | 330 | 50 | 46.05 | 15,198 |
| FPC | Open Porch Conc. Floor | 0 | 32 | 0 | 0.00 | 0 |
| FUS | Upper Story | 416 | 416 | 416 | 303.96 | 126,449 |
| GAR | Attached Garage | 0 | 416 | 0 | 0.00 | 0 |
| PTO | Patio | 0 | 504 | 0 | 0.00 | 0 |
| WDK | Wood Deck | 0 | 84 | 0 | 0.00 | 0 |
| | Ttl Gross Liv / Lease Area | 1,852 | 4,224 | 1,852 | | 562,940 |