Property Location 276 FULLER ROAD | Map ID 189/ 090/ 002/ / | Bldg Name | State Use 1010
Vision ID 13013 | Account # 328425 | Bldg # 1 | Sec # 1 of 1 | Card # 1 of 1 | Print Date 2/1/2024 12:57:15 PM

CURRENT OWNER

GERAIGERY, NOLA BUTLER

276 FULLER RD

CENTERVILLE MA 02632

TOPO		UTILITIES		STRT / ROAD		LOCATION	
1	Level	2	Public Water	1	Paved		
		4	Gas				
		6	Septic				

SUPPLEMENTAL DATA

Alt Prcl ID		Plan Ref.	388/35
Split Zonin		Land Ct#	
BID Parcel		#SR	
ResExpt Q	YES:	Life Estate	
#DL 1	LOT 2	PP STATU	
#DL 2			
GIS ID	F_970046_2701221	Assoc Pid#	

CURRENT ASSESSMENT

Description	Code	Assessed	Assessed
RESIDNTL	1010	321,000	321,000
RES LAND	1010	189,200	189,200
	Total	510,200	510,200

801

FY2024
BARNSTABLE, MA

VISION

RECORD OF OWNERSHIP

	BK-VOL/PAGE		SALE DATE	Q/U	V/I	SALE PRIC	VC
CURLEY, JAMES P & STACEY A	35982	203	09-13-2023	Q	I	500,000	00
GERAIGERY, NOLA BUTLER	16524	0305	03-07-2003	U	I	10	1A
GERAIGERY, RICHARD J & NOLA B	13591	0150	02-27-2001	U	I	10	1A
GERAIGERY, NOLA BUTLER	12392	0238	07-07-1999	U	V	81,000	2
HADAWAR, FAYEZ H	11561	0320	07-10-1998	Q	V	53,500	00

PREVIOUS ASSESSMENTS (HISTORY)

Year	Code	Assessed	Year	Code	Assessed V	Year	Code	Assessed
2023	1010	288,200	2022	1010	242,400	2021	1010	203,800
	1010	187,000		1010	132,900		1010	132,900
							1010	5,500
	Total	475,200		Total	375,300		Total	342,200

EXEMPTIONS

Year	Code	Description	Amount
2010	5C	RESIDENTIAL EXEMPTION	0.00
		Total	0.00

OTHER ASSESSMENTS

Code	Description	Number	Amount	Comm Int

This signature acknowledges a visit by a Data Collector or Assessor

APPRAISED VALUE SUMMARY

Appraised Bldg. Value (Card)	284,900
Appraised Xf (B) Value (Bldg)	30,600
Appraised Ob (B) Value (Bldg)	5,500
Appraised Land Value (Bldg)	189,200
Special Land Value	0
Total Appraised Parcel Value	510,200
Valuation Method	C
Total Appraised Parcel Value	510,200

ASSESSING NEIGHBORHOOD

Nbhd	Nbhd Name	B	Tracing	Batch
0106				CENVIL

NOTES

BUILDING PERMIT RECORD

Permit Id	Issue Date	Type	Description	Amount	Insp Date	% Comp	Date Comp	Comments
16-994	04-26-2016	835	Sid/Wind/Roof/	8,500		100		Reroof (stripping old shingles)
41542	10-06-1999	DW	Dwelling	85,210	01-01-2000	100	01-01-2000	
32001	07-09-1998	DW	Dwelling	78,000	07-01-1999	100	07-01-1999	

VISIT / CHANGE HISTORY

Date	Id	Type	Is	Cd	Purpost/Result
06-23-2020	LS			FR	Field Review
10-21-2015	SR	02		03	Cycl Insp Comp
02-13-2014	JR	03		16	In Office Review
01-05-2011	NF	03		03	Cycl Insp Comp
12-15-2008	PT	02		14	Cyclical Inspection
01-31-2000	MF	01		00	Meas/Listed-Interior Acces

LAND LINE VALUATION SECTION

B	Use Code	Description	Zone	LA	Land Units		Unit Price	Size Adj	AC Disc	Site Index	Cond.	Nbhd.	Nbhd. Adj	Notes	Location Adjustmen	Adj Unit P	Land Value
1	1010	Single Fam M-0	RD-	3	0.590	AC	176,344.00	1.58128	1.0000	5	1.00	0106	1.150		1.0000	320,681.5	189,200

Total Card Land Units 0.59 AC | Parcel Total Land Area 0.59 | Total Land Value 189,200

Property Location 276 FULLER ROAD | Map ID 189/ 090/ 002/ / | Bldg Name | State Use 1010
Vision ID 13013 | Account # 328425 | Bldg # 1 | Sec # 1 of 1 | Card # 1 of 1 | Print Date 2/1/2024 12:57:16 PM

CONSTRUCTION DETAIL

Element	Cd	Description
Style	04	Cape Cod
Model	01	Residential
Grade:	C	Average
Stories	1.75	1 3/4 Stories
Exterior Wall 1	14	Wood Shingle
Exterior Wall 2		
Roof Structure	03	Gable/Hip
Roof Cover	03	Asph/F Gls/Cmp
Interior Wall 1	05	Drywall
Interior Wall 2		
Interior Floor 1	09	Pine/Soft Wood
Interior Floor 2		
Heat Fuel	03	Gas
Heat Type	04	Hot Air
AC Type	03	Central
Bedrooms	03	3 Bedrooms
Full Baths	2	
Half Baths	0	
Extra Fixtures		
Total Rooms	7	7 Rooms
Bath Style		
Kitchen Style		
Occupancy		
Usrfld 105		
Accessory Apt		
Foundation Alt	01	Poured Conc.
Rms Prts		
Bath Split	20	2 Full-0 Half

CONSTRUCTION DETAIL (CONTINUED)

Element	Cd	Description

CONDO DATA

Parcel Id		C		Owne	0.0
		B		S	

Adjust Type	Code	Description	Factor%
Condo Flr			
Condo Unit			

COST / MARKET VALUATION

Building Value New	320,104
Year Built	1999
Effective Year Built	2005
Depreciation Code	A
Remodel Rating	
Year Remodeled	
Depreciation %	11
Functional Obsol	0
External Obsol	0
Trend Factor	1
Condition	
Condition %	
Percent Good	89
RCNLD	284,900
Dep % Ovr	
Dep Ovr Comment	
Misc Imp Ovr	
Misc Imp Ovr Comment	
Cost to Cure Ovr	
Cost to Cure Ovr Comment	

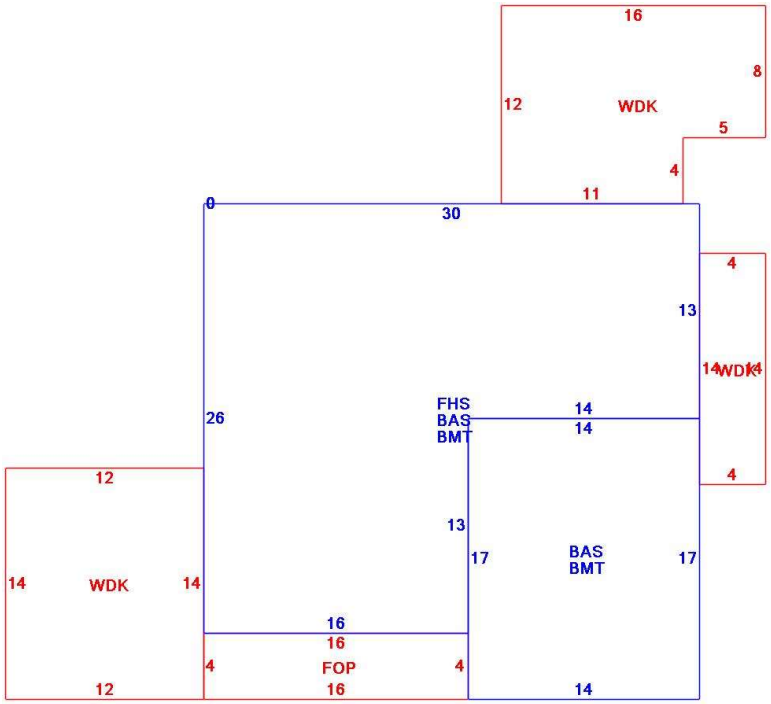

OB - OUTBUILDING & YARD ITEMS(L) / XF - BUILDING EXTRA FEATURES(B)

Code	Description	L/B	Units	Unit Price	Yr Blt	Cond. Cd	% Gd	Grade	Grade Adj.	Appr. Value
FPL3	Fireplace 2 sto	B	1	7000.00	2007		89		0.00	6,200
WDC	Wood Decking	L	396	20.00	2005		72		0.00	5,500
FOP	Open Porch-ro	B	64	55.00	2007		89		0.00	3,600
BMT	Basement-Unfi	B	836	26.01	2007		89		0.00	20,800

BUILDING SUB-AREA SUMMARY SECTION

Code	Description	Living Area	Floor Area	Eff Area	Unit Cost	Undeprec Value
BAS	First Floor	836	836	836	282.03	235,777
BMT	Basement Area	0	836	0	0.00	0
FHS	Half Story	299	598	299	141.02	84,327
FOP	Open Porch	0	64	0	0.00	0
WDK	Wood Deck	0	396	0	0.00	0
	Ttl Gross Liv / Lease Area	1,135	2,730	1,135		320,104