Property Location 308 OLD STAGE ROAD | Map ID 189/ 136/ 001/ / | Bldg Name | State Use 1010
Vision ID 13059 | Account # 111435 | Bldg # 1 | Sec # 1 of 1 | Card # 1 of 1 | Print Date 2/1/2024 1:02:56 PM

CURRENT OWNER

CENTERVILLE OLD STAGE LLC

63 WALPOLE STREET

DOVER MA 02030

TOPO		UTILITIES		STRT / ROAD		LOCATION	
1	Level	2	Public Water	1	Paved		
		4	Gas				
		6	Septic				

SUPPLEMENTAL DATA

Alt Prcl ID		Plan Ref.	351/94
Split Zonin		Land Ct#	
BID Parcel		#SR	
ResExpt Q		Life Estate	
#DL 1	LOT 1	PP STATU	
#DL 2			
GIS ID	F_970258_2702606	Assoc Pid#	

CURRENT ASSESSMENT

Description	Code	Assessed	Assessed
RESIDNTL	1010	365,500	365,500
RES LAND	1010	163,700	163,700
	Total	529,200	529,200

801

FY2024
BARNSTABLE, MA

VISION

RECORD OF OWNERSHIP

	BK-VOL/PAGE		SALE DATE	Q/U	V/I	SALE PRIC	VC
CENTERVILLE OLD STAGE LLC	33925	256	03-23-2021	U	I	1	1F
BAIN, ROBERT J ESTATE OF & PETER M	33798	38	10-15-2019	U	I	0	1F
BAIN, ROBERT J & PETER M	26913	0265	03-13-2011	U	I	0	1F
BAIN, MURRAY G & PATRICIA K	8235	0188	10-15-1992	U	I	100	A
BAIN, MURRAY G & PATRICIA K	3145	0343	08-29-1980	U	I	0	A

PREVIOUS ASSESSMENTS (HISTORY)

Year	Code	Assessed	Year	Code	Assessed V	Year	Code	Assessed
2023	1010	324,800	2022	1010	273,700	2021	1010	232,400
	1010	148,800		1010	110,200		1010	110,200
							1010	2,000
	Total	473,600		Total	383,900		Total	344,600

EXEMPTIONS

Year	Code	Description	Amount
		Total	0.00

OTHER ASSESSMENTS

Code	Description	Number	Amount	Comm Int

This signature acknowledges a visit by a Data Collector or Assessor

APPRAISED VALUE SUMMARY

Appraised Bldg. Value (Card)	321,200
Appraised Xf (B) Value (Bldg)	42,300
Appraised Ob (B) Value (Bldg)	2,000
Appraised Land Value (Bldg)	163,700
Special Land Value	0
Total Appraised Parcel Value	529,200
Valuation Method	C
Total Appraised Parcel Value	529,200

ASSESSING NEIGHBORHOOD

Nbhd	Nbhd Name	B	Tracing	Batch
0105				CENVIL

NOTES

BUILDING PERMIT RECORD

Permit Id	Issue Date	Type	Description	Amount	Insp Date	% Comp	Date Comp	Comments
41237	09-22-1999	NR	New Roof	3,500	01-01-2000	100	01-01-2000	

VISIT / CHANGE HISTORY

Date	Id	Type	Is	Cd	Purpost/Result
11-10-2020	CK	22		22	Change of Address
06-05-2020	LS			FR	Field Review
02-05-2020	CK	02		03	Cycl Insp Comp
03-30-2016	AL	03		16	In Office Review
08-08-2014	JR	03		16	In Office Review
04-16-2013	TR	03		16	In Office Review
01-05-2011	NF	03		03	Cycl Insp Comp

LAND LINE VALUATION SECTION

B	Use Code	Description	Zone	LA	Land Units		Unit Price	Size Adj	AC Disc	Site Index	Cond.	Nbhd.	Nbhd. Adj	Notes	Location Adjustmen	Adj Unit P	Land Value
1	1010	Single Fam M-0	RC	3	0.580	AC	176,344.00	1.60055	1.0000	5	1.00	0105	1.000		1.0000	282,256.2	163,700

Total Card Land Units 0.58 AC | Parcel Total Land Area 0.58 | Total Land Value 163,700

Property Location 308 OLD STAGE ROAD | Map ID 189/ 136/ 001/ / | Bldg Name | State Use 1010
Vision ID 13059 | Account # 111435 | Bldg # 1 | Sec # 1 of 1 | Card # 1 of 1 | Print Date 2/1/2024 1:02:56 PM

CONSTRUCTION DETAIL

Element	Cd	Description
Style	04	Cape Cod
Model	01	Residential
Grade:	C	Average
Stories	1.75	1 3/4 Stories
Exterior Wall 1	14	Wood Shingle
Exterior Wall 2		
Roof Structure	03	Gable/Hip
Roof Cover	03	Asph/F Gls/Cmp
Interior Wall 1	05	Drywall
Interior Wall 2		
Interior Floor 1	14	Carpet
Interior Floor 2		
Heat Fuel	03	Gas
Heat Type	05	Hot Water
AC Type	01	None
Bedrooms	03	3 Bedrooms
Full Baths	2	
Half Baths	0	
Extra Fixtures		
Total Rooms	8	8 Rooms
Bath Style		
Kitchen Style		
Occupancy		
Usrfld 105		
Accessory Apt		
Foundation Alt	01	Poured Conc.
Rms Prts		
Bath Split	20	2 Full-0 Half

CONSTRUCTION DETAIL (CONTINUED)

Element	Cd	Description

CONDO DATA

Parcel Id		C		Owne	0.0
		B		S	

Adjust Type	Code	Description	Factor%
Condo Flr			
Condo Unit			

COST / MARKET VALUATION

Building Value New	465,443
Year Built	1935
Effective Year Built	1979
Depreciation Code	A
Remodel Rating	
Year Remodeled	
Depreciation %	31
Functional Obsol	0
External Obsol	0
Trend Factor	1
Condition	
Condition %	
Percent Good	69
RCNLD	321,200
Dep % Ovr	
Dep Ovr Comment	
Misc Imp Ovr	
Misc Imp Ovr Comment	
Cost to Cure Ovr	
Cost to Cure Ovr Comment	

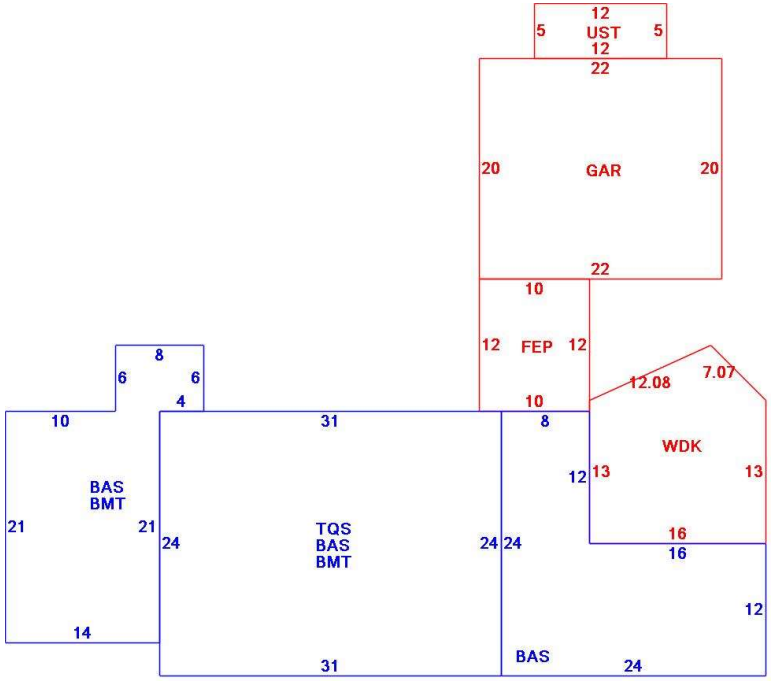

OB - OUTBUILDING & YARD ITEMS(L) / XF - BUILDING EXTRA FEATURES(B)

Code	Description	L/B	Units	Unit Price	Yr Blt	Cond. Cd	% Gd	Grade	Grade Adj.	Appr. Value
FPL2	Fireplace 1.5 s	B	1	6000.00	1979		69		0.00	4,100
WDC	Wood Deck w/	L	248	18.00	1987		36		0.00	1,700
FEP	Enclosed porc	B	120	70.00	1979		69		0.00	6,400
GAR	Attached Gara	B	440	40.00	1979		69		0.00	11,800
UST	Utility Storage-	B	60	17.11	1979		69		0.00	600
BMT	Basement-Unfi	B	1,086	26.01	1979		69		0.00	19,400
SHED	Shed	L	36	18.00	1995		52		0.00	300

BUILDING SUB-AREA SUMMARY SECTION

Code	Description	Living Area	Floor Area	Eff Area	Unit Cost	Undeprec Value
BAS	First Floor	1,470	1,470	1,470	238.20	350,154
BMT	Basement Area	0	1,086	0	0.00	0
FEP	Enclosed Porch	0	120	0	0.00	0
GAR	Attached Garage	0	440	0	0.00	0
TQS	Three Quarter Story	484	744	484	154.96	115,289
UST	Utility Enclosure	0	60	0	0.00	0
WDK	Wood Deck	0	248	0	0.00	0
	Ttl Gross Liv / Lease Area	1,954	4,168	1,954		465,443