Property Location 105 HILLSIDE DRIVE | Map ID 193/ 014/ / / | Bldg Name | State Use 1010
Vision ID 13798 | Account # 118759 | Bldg # 1 | Sec # 1 of 1 | Card # 1 of 1 | Print Date 2/1/2024 2:29:14 PM

CURRENT OWNER

FALCONER, SHIRLEY A & BARRINGT

105 HILLSIDE DRIVE

CENTERVILLE MA 02632

TOPO	UTILITIES	STRT / ROAD	LOCATION
1 Level	2 Public Water	1 Paved	1 Marginal View
	4 Gas		
	6 Septic		

SUPPLEMENTAL DATA

Alt Prcl ID	Plan Ref. 182/25
Split Zonin	Land Ct#
BID Parcel	#SR
ResExpt Q	Life Estate
#DL 1 LOT 7D	PP STATU
#DL 2	
GIS ID F_969598_2710431	Assoc Pid#

CURRENT ASSESSMENT

Description	Code	Assessed	Assessed
RESIDNTL	1010	492,100	492,100
RES LAND	1010	151,900	151,900
Total		644,000	644,000

801

FY2024
BARNSTABLE, MA

VISION

RECORD OF OWNERSHIP

	BK-VOL/PAGE		SALE DATE	Q/U	V/I	SALE PRIC	VC
FALCONER, SHIRLEY A & BARRINGTON	28553	0057	12-05-2014	Q	I	339,500	00
REEVES, DONALD T & ELEANOR M	5828	0014	07-15-1987	Q	I	225,000	U
JOHNSTONE, FREDA I	1306	1114	07-29-1965	U		0	

PREVIOUS ASSESSMENTS (HISTORY)

Year	Code	Assessed	Year	Code	Assessed V	Year	Code	Assessed
2023	1010	428,900	2022	1010	370,300	2021	1010	298,600
	1010	138,100		1010	102,300		1010	102,300
							1010	2,400
	Total	567,000		Total	472,600		Total	403,300

EXEMPTIONS

Year	Code	Description	Amount
		Total	0.00

OTHER ASSESSMENTS

Code	Description	Number	Amount	Comm Int

This signature acknowledges a visit by a Data Collector or Assessor

ASSESSING NEIGHBORHOOD

Nbhd	Nbhd Name	B	Tracing	Batch
0105				CENVIL

NOTES

APPRAISED VALUE SUMMARY

Appraised Bldg. Value (Card)	430,800
Appraised Xf (B) Value (Bldg)	58,900
Appraised Ob (B) Value (Bldg)	2,400
Appraised Land Value (Bldg)	151,900
Special Land Value	0
Total Appraised Parcel Value	644,000
Valuation Method	C
Total Appraised Parcel Value	644,000

BUILDING PERMIT RECORD

Permit Id	Issue Date	Type	Description	Amount	Insp Date	% Comp	Date Comp	Comments
18-272	01-31-2018	835	Sid/Wind/Roof/	6,000		100		re-roof stripping old shingles -
17-4226	12-11-2017	835	Sid/Wind/Roof/	21,979		100		Replacement windows (12) Uv
201502695	06-01-2015	IN	Insulation	1,600	06-30-2015	100	06-30-2016	WEATHERIZATION
B28019	06-01-1985	AD	Addition	5,000	01-15-1986	100		CE ADD'N

VISIT / CHANGE HISTORY

Date	Id	Type	Is	Cd	Purpost/Result
04-28-2020	SR	02		03	Cycl Insp Comp
04-17-2020	LS			FR	Field Review
06-01-2016	JR	03		20	Sale Review
07-21-2009	PT	02		14	Cyclical Inspection
07-12-2001	PT	01		00	Meas/Listed-Interior Acces
11-21-2000	PT	02		01	Meas/Est
01-15-1986	HM				

LAND LINE VALUATION SECTION

B	Use Code	Description	Zone	LA	Land Units		Unit Price	Size Adj	AC Disc	Site Index	Cond.	Nbhd.	Nbhd. Adj	Notes	Location Adjustmen	Adj Unit P	Land Value
1	1010	Single Fam M-0	RC	3	0.340	AC	176,344.00	2.53383	1.0000	5	1.00	0105	1.000		1.0000	446,820.4	151,900

Total Card Land Units 0.34 AC | Parcel Total Land Area 0.34 | Total Land Value 151,900

Property Location 105 HILLSIDE DRIVE | Map ID 193/ 014/ / / | Bldg Name | State Use 1010
Vision ID 13798 | Account # 118759 | Bldg # 1 | Sec # 1 of 1 | Card # 1 of 1 | Print Date 2/1/2024 2:29:14 PM

CONSTRUCTION DETAIL

Element	Cd	Description
Style	01	Ranch
Model	01	Residential
Grade:	C+	Average Plus
Stories	1	1 Story
Exterior Wall 1	14	Wood Shingle
Exterior Wall 2		
Roof Structure	03	Gable/Hip
Roof Cover	03	Asph/F Gls/Cmp
Interior Wall 1	05	Drywall
Interior Wall 2		
Interior Floor 1	14	Carpet
Interior Floor 2	12	Hardwood
Heat Fuel	02	Oil
Heat Type	05	Hot Water
AC Type	01	None
Bedrooms	03	3 Bedrooms
Full Baths	3	
Half Baths	0	
Extra Fixtures		
Total Rooms	8	8 Rooms
Bath Style		
Kitchen Style		
Occupancy		
Usrfld 105		
Accessory Apt		
Foundation Alt	01	Poured Conc.
Rms Prts		
Bath Split	30	3 Full-0 Half

CONSTRUCTION DETAIL (CONTINUED)

Element	Cd	Description

CONDO DATA

Parcel Id		C		Owne	0.0
		B		S	

Adjust Type	Code	Description	Factor%
Condo Flr			
Condo Unit			

COST / MARKET VALUATION

Building Value New	538,472
Year Built	1965
Effective Year Built	1993
Depreciation Code	G
Remodel Rating	
Year Remodeled	
Depreciation %	20
Functional Obsol	0
External Obsol	0
Trend Factor	1
Condition	
Condition %	
Percent Good	80
RCNLD	430,800
Dep % Ovr	
Dep Ovr Comment	
Misc Imp Ovr	
Misc Imp Ovr Comment	
Cost to Cure Ovr	
Cost to Cure Ovr Comment	

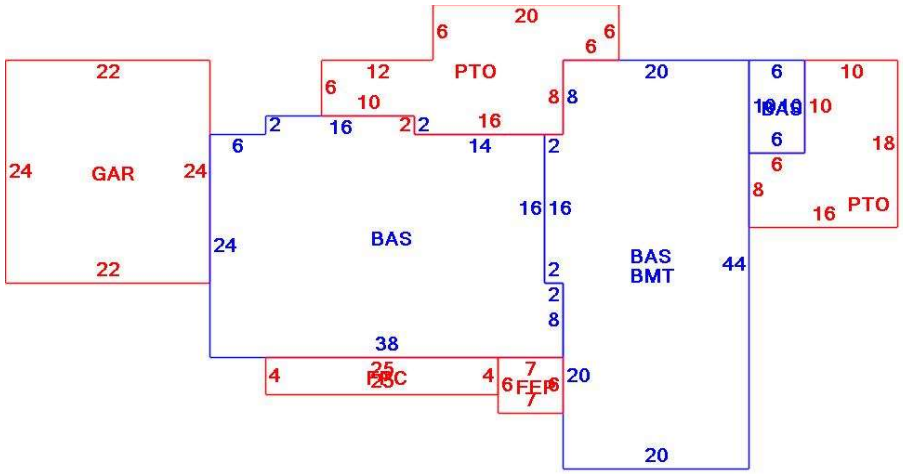

OB - OUTBUILDING & YARD ITEMS(L) / XF - BUILDING EXTRA FEATURES(B)

Code	Description	L/B	Units	Unit Price	Yr Blt	Cond. Cd	% Gd	Grade	Grade Adj.	Appr. Value
FPL1	Fireplace 1 sto	B	1	5000.00	1995		80		0.00	4,000
FPO	Ext FP Openin	B	1	2000.00	1995		80		0.00	1,600
BFA1	Bsmt Fin-Goo	B	400	32.56	1995		80		0.00	10,400
PAT1	Patio- Average	L	536	5.89	1998		79		0.00	2,400
FOPC	Open Prch-roo	B	100	55.00	1995		80		0.00	3,700
FEP	Enclosed porc	B	42	70.00	1995		80		0.00	3,900
GAR	Attached Gara	B	528	40.00	1995		80		0.00	15,400
BMT	Basement-Unfi	B	912	26.01	1995		80		0.00	19,900

BUILDING SUB-AREA SUMMARY SECTION

Code	Description	Living Area	Floor Area	Eff Area	Unit Cost	Undeprec Value
BAS	First Floor	1,884	1,884	1,884	285.81	538,472
BMT	Basement Area	0	912	0	0.00	0
FEP	Enclosed Porch	0	42	0	0.00	0
FPC	Open Porch Conc. Floor	0	100	0	0.00	0
GAR	Attached Garage	0	528	0	0.00	0
PTO	Patio	0	536	0	0.00	0
	Ttl Gross Liv / Lease Area	1,884	4,002	1,884		538,472