Property Location 59 SHORT BEACH ROAD | Map ID 206/ 034/ / / | Bldg Name | State Use 1010
Vision ID 14380 | Account # 123770 | Bldg # 1 | Sec # 1 of 1 | Card # 1 of 1 | Print Date 2/1/2024 3:35:06 PM

CURRENT OWNER

BERGERON, JAY & CROWLEY, JOAN

337 GREAT PLAIN AVE

NEEDHAM MA 02192

TOPO		UTILITIES		STRT / ROAD		LOCATION	
1	Level	2	Public Water	1	Paved	7	Waterfront
		4	Gas			1	Excel View
		6	Septic				

SUPPLEMENTAL DATA

Alt Prcl ID		Plan Ref.	
Split Zonin		Land Ct#	9288-J
BID Parcel		#SR	
ResExpt Q		Life Estate	
#DL 1	LOT Q2	PP STATU	
#DL 2			
GIS ID	F_971684_2695225	Assoc Pid#	

CURRENT ASSESSMENT

Description	Code	Assessed	Assessed
RESIDNTL	1010	551,300	551,300
RES LAND	1010	973,600	973,600
	Total	1,524,900	1,524,900

801

FY2024
BARNSTABLE, MA

VISION

RECORD OF OWNERSHIP

	BK-VOL/PAGE		SALE DATE	Q/U	V/I	SALE PRIC	VC
BERGERON, JAY & CROWLEY, JOANNE	C123134	0	04-23-1991	Q	I	200,000	U
MCGRATH, WILLIAM J	C103252	0	09-15-1985	U	I	10	A
MCGRATH, WINIFRED C	C20110	0	01-21-1957	U		0	

PREVIOUS ASSESSMENTS (HISTORY)

Year	Code	Assessed	Year	Code	Assessed V	Year	Code	Assessed
2023	1010	496,600	2022	1010	427,800	2021	1010	280,300
	1010	785,400		1010	692,600		1010	692,600
							1010	94,500
	Total	1,282,000		Total	1,120,400		Total	1,067,400

EXEMPTIONS

Year	Code	Description	Amount
		Total	0.00

OTHER ASSESSMENTS

Code	Description	Number	Amount	Comm Int

This signature acknowledges a visit by a Data Collector or Assessor

ASSESSING NEIGHBORHOOD

Nbhd	Nbhd Name	B	Tracing	Batch
0116				CENVIL

NOTES

APPRAISED VALUE SUMMARY

Appraised Bldg. Value (Card)	432,400
Appraised Xf (B) Value (Bldg)	24,400
Appraised Ob (B) Value (Bldg)	94,500
Appraised Land Value (Bldg)	973,600
Special Land Value	0
Total Appraised Parcel Value	1,524,900
Valuation Method	C
Total Appraised Parcel Value	1,524,900

BUILDING PERMIT RECORD

Permit Id	Issue Date	Type	Description	Amount	Insp Date	% Comp	Date Comp	Comments
16-3356	01-13-2017	880	Alt-Int work-Res	4,000	01-03-2018	100	06-30-2018	To Change Interior Layout Mov
16-2941	10-07-2016	834	Sheet Metal	12,000	05-15-2017	100	06-30-2017	new gas furnace with 2 zones
16-39	04-26-2016	804	Addn Alt-Res	235,700	01-03-2018	100	06-30-2018	rebuild garage, add front & rea
201500141	05-12-2015	FN	Foundation	75,000	02-14-2017	100	06-30-2017	LIFT HOUSE ABOVE FLOOD
201105143	06-06-2012	DK	Dock	33,900	03-20-2013	100	06-30-2013	4X80 PILING & TIMBER PIER
201103519	07-05-2011	NW	New Windows	50,000	06-30-2012	100	06-30-2012	ANDERSON WINDS-2 DRS

VISIT / CHANGE HISTORY

Date	Id	Type	Is	Cd	Purpost/Result
05-14-2020	WD			FR	Field Review
07-13-2018	SR	02		02	Bldg Permit Completed
06-13-2017	SR	01		02	Bldg Permit Completed
02-21-2017	SR	02		13	CALL BACK
06-24-2016	SR	01		13	CALL BACK
03-23-2015	SR	02		03	Cycl Insp Comp
03-26-2014	JR	03		16	In Office Review

LAND LINE VALUATION SECTION

B	Use Code	Description	Zone	LA	Land Units		Unit Price	Size Adj	AC Disc	Site Index	Cond.	Nbhd.	Nbhd. Adj	Notes	Location Adjustmen		Adj Unit P	Land Value
1	1010	Single Fam M-0	CBD	3	0.150	AC	176,344.00	5.18399	1.0000	5	1.00	0116	7.100	CENTERVILLE RIVER		1.0000	6,490,587	973,600

Total Card Land Units 0.15 AC | Parcel Total Land Area 0.15 | Total Land Value 973,600

Property Location 59 SHORT BEACH ROAD | Map ID 206/ 034/ / / | Bldg Name | State Use 1010
Vision ID 14380 | Account # 123770 | Bldg # 1 | Sec # 1 of 1 | Card # 1 of 1 | Print Date 2/1/2024 3:35:07 PM

CONSTRUCTION DETAIL

Element	Cd	Description
Style	04	Cape Cod
Model	01	Residential
Grade:	B-	Custom Minus
Stories	2	2 Stories
Exterior Wall 1	14	Wood Shingle
Exterior Wall 2		
Roof Structure	11	Bowstring Trus
Roof Cover	10	Wood Shingle
Interior Wall 1	02	Wall Brd/Wood
Interior Wall 2	03	Plastered
Interior Floor 1	12	Hardwood
Interior Floor 2		
Heat Fuel	03	Gas
Heat Type	04	Hot Air
AC Type	03	Central
Bedrooms	02	2 Bedrooms
Full Baths	2	
Half Baths	1	
Extra Fixtures		
Total Rooms	6	
Bath Style		
Kitchen Style		
Occupancy		
Usrfld 105		
Accessory Apt		
Foundation Alt	01	Poured Conc.
Rms Prts		
Bath Split	21	2 Full-1 Half

CONSTRUCTION DETAIL (CONTINUED)

Element	Cd	Description

CONDO DATA

Parcel Id		C		Owne	0.0
		B		S	

Adjust Type	Code	Description	Factor%
Condo Flr			
Condo Unit			

COST / MARKET VALUATION

Building Value New	561,607
Year Built	1940
Effective Year Built	1989
Depreciation Code	VG
Remodel Rating	
Year Remodeled	
Depreciation %	23
Functional Obsol	0
External Obsol	0
Trend Factor	1
Condition	
Condition %	
Percent Good	77
RCNLD	432,400
Dep % Ovr	
Dep Ovr Comment	
Misc Imp Ovr	
Misc Imp Ovr Comment	
Cost to Cure Ovr	
Cost to Cure Ovr Comment	

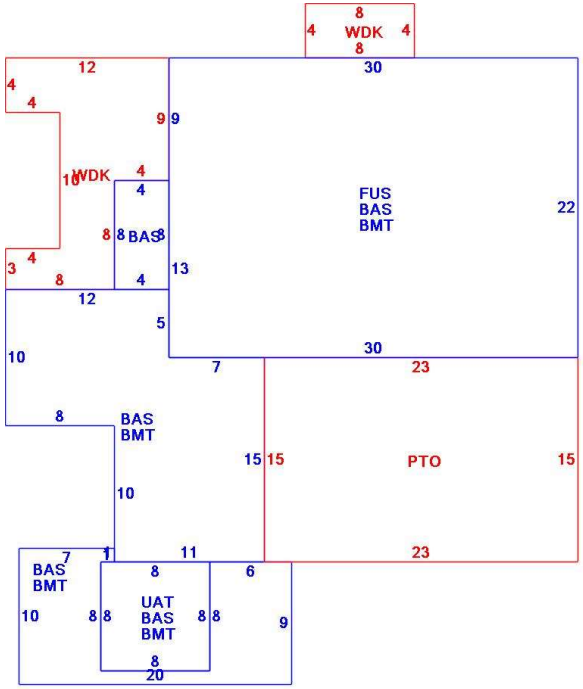

OB - OUTBUILDING & YARD ITEMS(L) / XF - BUILDING EXTRA FEATURES(B)

Code	Description	L/B	Units	Unit Price	Yr Blt	Cond. Cd	% Gd	Grade	Grade Adj.	Appr. Value
DKAV	Dock-Ave	L	1	100000.0	2011		84		0.00	84,000
BGR2	2 Stall Bmt Ga	B	1	3244.00	1989		77		0.00	2,500
BMT	Basement-Unfi	B	1,112	26.01	1989		77		0.00	21,900
WDC	Wood Decking	L	32	20.00	2015		92		0.00	2,000
PAT2	Patio-Good	L	345	9.94	2015		96		0.00	3,300
WDC	Deck comp w	L	132	28.00	2016		94		0.00	5,200

BUILDING SUB-AREA SUMMARY SECTION

Code	Description	Living Area	Floor Area	Eff Area	Unit Cost	Undeprec Value
BAS	First Floor	1,144	1,144	1,144	310.28	354,961
BMT	Basement Area	0	1,112	0	0.00	0
FUS	Upper Story	660	660	660	310.28	204,785
PTO	Patio	0	345	0	0.00	0
UAT	Attic, Unfinished	0	64	6	29.09	1,862
WDK	Wood Deck	0	164	0	0.00	0
	Ttl Gross Liv / Lease Area	1,804	3,489	1,810		561,608