Property Location 20 FOREST HILLS ROAD | Map ID 025/ 007/ 001/ / | Bldg Name | State Use 1010
Vision ID 1448 | Account # 401470 | Bldg # 1 | Sec # 1 of 1 | Card # 1 of 1 | Print Date 1/30/2024 3:13:32 PM

CURRENT OWNER

STRANBERG, MARK A & ANNE F

20 FOREST HILLS ROAD

COTUIT MA 02635

TOPO / UTILITIES / STRT / ROAD / LOCATION

SUPPLEMENTAL DATA

Alt Prcl ID		Plan Ref.	443/71
Split Zonin		Land Ct#	
BID Parcel		#SR	
ResExpt Q	YES:	Life Estate	
#DL 1	LOT 1	PP STATU	
#DL 2			
GIS ID	F_944224_2697911	Assoc Pid#	

CURRENT ASSESSMENT

Description	Code	Assessed	Assessed
RESIDNTL	1010	816,900	816,900
RES LAND	1010	172,100	172,100
Total		989,000	989,000

801

FY2024
BARNSTABLE, MA

VISION

RECORD OF OWNERSHIP

	BK-VOL/PAGE		SALE DATE	Q/U	V/I	SALE PRIC	VC
STRANBERG, MARK A & ANNE F	31622	0199	10-26-2018	Q	I	584,000	00
MCINNIS, HAROLD JR & ANN	13352	0302	11-08-2000	U	I	368,500	1
MCSHANE CONSTRUCTION CO INC	11904	0157	12-10-1998	U	V	200,000	1
HOSTETTER, PRISCILLA M	7104	0344	01-22-1990	U	V	1	1
HOSTETTER, DANIEL C	4425	0272	02-15-1985	U	V	750,000	N

PREVIOUS ASSESSMENTS (HISTORY)

Year	Code	Assessed	Year	Code	Assessed V	Year	Code	Assessed
2023	1010	694,800	2022	1010	602,300	2021	1010	475,100
	1010	170,000		1010	120,900		1010	120,900
							1010	9,000
	Total	864,800		Total	723,200		Total	605,000

EXEMPTIONS

Year	Code	Description	Amount
2020	5C	RESIDENTIAL EXEMPTION	0.00
		Total	0.00

OTHER ASSESSMENTS

Code	Description	Number	Amount	Comm Int

This signature acknowledges a visit by a Data Collector or Assessor

APPRAISED VALUE SUMMARY

Appraised Bldg. Value (Card)	735,500
Appraised Xf (B) Value (Bldg)	67,300
Appraised Ob (B) Value (Bldg)	14,100
Appraised Land Value (Bldg)	172,100
Special Land Value	0
Total Appraised Parcel Value	989,000
Valuation Method	C
Total Appraised Parcel Value	989,000

ASSESSING NEIGHBORHOOD

Nbhd	Nbhd Name	B	Tracing	Batch
0106				COTUIT

NOTES

BUILDING PERMIT RECORD

Permit Id	Issue Date	Type	Description	Amount	Insp Date	% Comp	Date Comp	Comments
19-714	03-14-2019	822	Insulation	5,231	06-30-2019	100	06-30-2019	Insulation; See Contract
200706432	10-11-2007	GN	Generator		06-30-2008	100	06-30-2008	GENERATOR
46812	06-15-2000	DW	Dwelling	254,000	03-28-2001	100	01-01-2001	NW DW

VISIT / CHANGE HISTORY

Date	Id	Type	Is	Cd	Purpost/Result
10-31-2022	SR	02		03	Cycl Insp Comp
05-28-2020	DM			FR	Field Review
01-06-2020	JD	03		16	In Office Review
12-10-2019	PK	03		16	In Office Review
08-29-2019	CK	22		22	Change of Address
01-23-2013	RB	03		03	Cycl Insp Comp
03-05-2007	MF	02		13	CALL BACK

LAND LINE VALUATION SECTION

B	Use Code	Description	Zone	LA	Land Units		Unit Price	Size Adj	AC Disc	Site Index	Cond.	Nbhd.	Nbhd. Adj	Notes	Location Adjustmen	Adj Unit P	Land Value
1	1010	Single Fam M-0	RF	2	0.270	AC	176,344.00	3.14262	1.0000	5	1.00	0106	1.150		1.0000	637,307.2	172,100

Total Card Land Units 0.27 AC | Parcel Total Land Area 0.27 | Total Land Value 172,100

Property Location 20 FOREST HILLS ROAD | Map ID 025/ 007/ 001/ / | Bldg Name | State Use 1010
Vision ID 1448 | Account # 401470 | Bldg # 1 | Sec # 1 of 1 | Card # 1 of 1 | Print Date 1/30/2024 3:13:33 PM

CONSTRUCTION DETAIL

Element	Cd	Description
Style	01	Ranch
Model	01	Residential
Grade:	C+	Average Plus
Stories	1	1 Story
Exterior Wall 1	14	Wood Shingle
Exterior Wall 2	11	Clapboard
Roof Structure	03	Gable/Hip
Roof Cover	03	Asph/F Gls/Cmp
Interior Wall 1	03	Plastered
Interior Wall 2		
Interior Floor 1	12	Hardwood
Interior Floor 2		
Heat Fuel	03	Gas
Heat Type	04	Hot Air
AC Type	03	Central
Bedrooms	03	3 Bedrooms
Full Baths	2	
Half Baths	1	
Extra Fixtures		
Total Rooms	7	7 Rooms
Bath Style		
Kitchen Style		
Occupancy		
Usrfld 105		
Accessory Apt		
Foundation Alt	01	Poured Conc.
Rms Prts		
Bath Split	21	2 Full-1 Half

CONSTRUCTION DETAIL (CONTINUED)

Element	Cd	Description

CONDO DATA

Parcel Id		C		Owne	0.0
		B		S	

Adjust Type	Code	Description	Factor%
Condo Flr			
Condo Unit			

COST / MARKET VALUATION

Building Value New	782,420
Year Built	2000
Effective Year Built	2011
Depreciation Code	G
Remodel Rating	
Year Remodeled	
Depreciation %	6
Functional Obsol	0
External Obsol	0
Trend Factor	1
Condition	
Condition %	
Percent Good	94
RCNLD	735,500
Dep % Ovr	
Dep Ovr Comment	
Misc Imp Ovr	
Misc Imp Ovr Comment	
Cost to Cure Ovr	
Cost to Cure Ovr Comment	

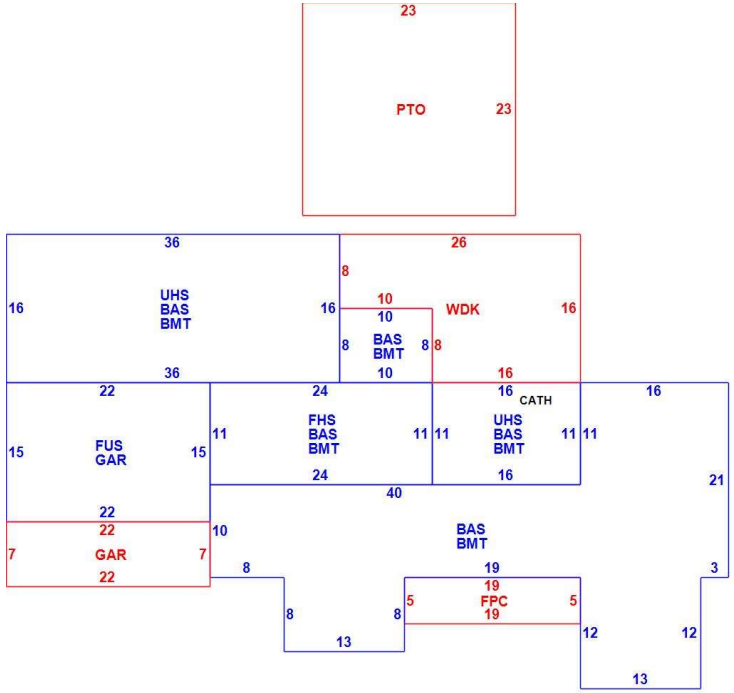

OB - OUTBUILDING & YARD ITEMS(L) / XF - BUILDING EXTRA FEATURES(B)

Code	Description	L/B	Units	Unit Price	Yr Blt	Cond. Cd	% Gd	Grade	Grade Adj.	Appr. Value
FPLG	Gas Fireplace-	B	1	2500.00	2013		94		0.00	2,400
WDC	Wood Decking	L	336	20.00	2005		72		0.00	4,800
FOPC	Open Prch-roo	B	95	55.00	2013		94		0.00	4,200
GAR	Attached Gara	B	484	40.00	2013		94		0.00	17,100
BMT	Basement-Unfi	B	2,092	26.01	2013		94		0.00	43,600
GEN	Emergency Ge	L	1	5550.00	2007		76		0.00	4,200
PAT2	Patio-Good	L	529	9.94	2020		100		0.00	5,100

BUILDING SUB-AREA SUMMARY SECTION

Code	Description	Living Area	Floor Area	Eff Area	Unit Cost	Undeprec Value
BAS	First Floor	2,092	2,092	2,092	281.45	588,785
BMT	Basement Area	0	2,092	0	0.00	0
FHS	Half Story	132	264	132	140.72	37,151
FPC	Open Porch Conc. Floor	0	95	0	0.00	0
FUS	Upper Story	330	330	330	281.45	92,877
GAR	Attached Garage	0	484	0	0.00	0
PTO	Patio	0	529	0	0.00	0
UHS	Half Story, Unfinished	0	752	226	84.58	63,607
WDK	Wood Deck	0	336	0	0.00	0
	Ttl Gross Liv / Lease Area	2,554	6,974	2,780		782,420