Property Location 490 MAIN STREET (CENT.) Map ID 207/ 046/ / / Bldg Name State Use 1010
Vision ID 14530 Account # 125215 Bldg # 1 Sec # 1 of 2 Card # 1 of 2 Print Date 2/1/2024 3:52:21 PM

CURRENT OWNER

KERNS, JOHN J IV & NADINE

490 MAIN STREET

CENTERVILLE MA 02632

TOPO		UTILITIES		STRT / ROAD		LOCATION	
1	Level	2	Public Water	1	Paved		
		4	Gas				
		6	Septic				

SUPPLEMENTAL DATA

Alt Prcl ID
Split Zonin
BID Parcel
ResExpt Q YES:
#DL 1
#DL 2
GIS ID F_971120_2698715

Plan Ref. DEED DESCRIPT
Land Ct#
#SR
Life Estate
PP STATU
Assoc Pid#

CURRENT ASSESSMENT

Description	Code	Assessed	Assessed
RESIDNTL	1010	1,260,800	1,260,800
RES LAND	1010	534,000	534,000
	Total	1,794,800	1,794,800

801

FY2024
BARNSTABLE, MA

VISION

RECORD OF OWNERSHIP

	BK-VOL/PAGE		SALE DATE	Q/U	V/I	SALE PRIC	VC
KERNS, JOHN J IV & NADINE	30194	0024	12-27-2016	Q	I	790,000	00
TJLC LLC	25517	0279	06-20-2011	Q	I	850,000	00
CAMPBELL, GEORGE K & LORETTA TRS	12591	0334	10-07-1999	U	I	1	1A
CAMPBELL, GEORGE K & LORETTA	2520	0105	06-01-1977	U		0	

PREVIOUS ASSESSMENTS (HISTORY)

Year	Code	Assessed	Year	Code	Assessed V	Year	Code	Assessed
2023	1010	962,000	2022	1010	796,500	2021	1010	633,400
	1010	375,800		1010	319,000		1010	290,000
							1010	19,300
	Total	1,337,800		Total	1,115,500		Total	942,700

EXEMPTIONS

Year	Code	Description	Amount
2022	5C	RESIDENTIAL EXEMPTION	0.00
		Total	0.00

OTHER ASSESSMENTS

Code	Description	Number	Amount	Comm Int

This signature acknowledges a visit by a Data Collector or Assessor

ASSESSING NEIGHBORHOOD

Nbhd	Nbhd Name	B	Tracing	Batch
0109				CENVIL

NOTES

APPRAISED VALUE SUMMARY

Appraised Bldg. Value (Card)	1,205,100
Appraised Xf (B) Value (Bldg)	52,700
Appraised Ob (B) Value (Bldg)	3,000
Appraised Land Value (Bldg)	534,000
Special Land Value	0
Total Appraised Parcel Value	1,794,800
Valuation Method	C
Total Appraised Parcel Value	1,794,800

BUILDING PERMIT RECORD

Permit Id	Issue Date	Type	Description	Amount	Insp Date	% Comp	Date Comp	Comments
BLDR-21-14	12-06-2021	804	Addn Alt-Res	200,000	02-27-2023	80		Renovate kitchen, add patio
SHED-21-3	01-12-2021	863	Shed Registrati	0	06-30-2022	100	06-30-2022	
17-3936	12-26-2017	822	Insulation	2,964	04-17-2018	100	06-30-2018	INSULATION / WEATHERIZA
17-2449	08-03-2017	834	Sheet Metal	0	04-17-2018	100	06-30-2018	Installation of 3 Unico systems
17-1675	06-06-2017	880	Alt-Int work-Res	35,000	04-17-2018	100	06-30-2018	remodel 3 1/2 baths
16-1028	05-02-2016	835	Sid/Wind/Roof/	12,600	06-30-2016	100	06-30-2016	RE-ROOF STRIPPING OLD S

VISIT / CHANGE HISTORY

Date	Id	Type	Is	Cd	Purpost/Result
02-27-2023	SR	02		13	CALL BACK
09-07-2022	SR	01		13	CALL BACK
08-04-2021	LH	03		16	In Office Review
05-18-2020	WD			FR	Field Review
07-24-2018	LH	03		16	In Office Review
07-13-2018	SR	02		02	Bldg Permit Completed
02-22-2018	MD	22		22	Change of Address

LAND LINE VALUATION SECTION

B	Use Code	Description	Zone	LA	Land Units		Unit Price	Size Adj	AC Disc	Site Index	Cond.	Nbhd.	Nbhd. Adj	Notes	Location Adjustmen	Adj Unit P	Land Value
1	1010	Single Fam M-0	RD-	3	0.750	AC	176,344.00	1.30239	1.0000	5	1.00	0110	3.100		1.0000	711,971.2	534,000

Total Card Land Units 0.75 AC Parcel Total Land Area 0.75 Total Land Value 534,000

Property Location 490 MAIN STREET (CENT.) Map ID 207/ 046/ / / Bldg Name State Use 1010
Vision ID 14530 Account # 125215 Bldg # 1 Sec # 1 of 2 Card # 1 of 2 Print Date 2/1/2024 3:52:22 PM

CONSTRUCTION DETAIL

Element	Cd	Description
Style	06	Conventional
Model	01	Residential
Grade:	B+	Custom Plus
Stories	2.5	2 1/2 Stories
Exterior Wall 1	14	Wood Shingle
Exterior Wall 2	11	Clapboard
Roof Structure	03	Gable/Hip
Roof Cover	03	Asph/F Gls/Cmp
Interior Wall 1	03	Plastered
Interior Wall 2		
Interior Floor 1	09	Pine/Soft Wood
Interior Floor 2		
Heat Fuel	03	Gas
Heat Type	05	Hot Water
AC Type	03	Central
Bedrooms	06	6 Bedrooms
Full Baths	4	
Half Baths	0	
Extra Fixtures		
Total Rooms	10	10 Rooms
Bath Style		
Kitchen Style		
Occupancy		
Usrfld 105		
Accessory Apt		
Foundation Alt	11	Stone Ftgs
Rms Prts		
Bath Split	40	4 Full-0 Half

CONSTRUCTION DETAIL (CONTINUED)

Element	Cd	Description

CONDO DATA

Parcel Id		C		Owne	0.0
		B		S	

Adjust Type	Code	Description	Factor%
Condo Flr			
Condo Unit			

COST / MARKET VALUATION

Building Value New	1,443,004
Year Built	1860
Effective Year Built	1999
Depreciation Code	E
Remodel Rating	
Year Remodeled	
Depreciation %	16
Functional Obsol	0
External Obsol	0
Trend Factor	1
Condition	
Condition %	
Percent Good	84
RCNLD	1,205,100
Dep % Ovr	
Dep Ovr Comment	
Misc Imp Ovr	
Misc Imp Ovr Comment	
Cost to Cure Ovr	
Cost to Cure Ovr Comment	

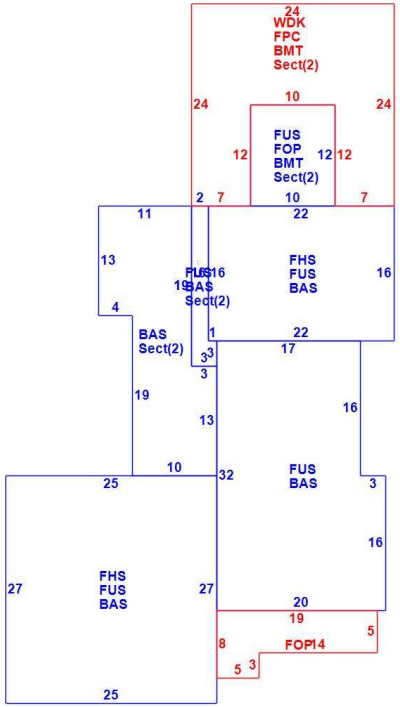

OB - OUTBUILDING & YARD ITEMS(L) / XF - BUILDING EXTRA FEATURES(B)

Code	Description	L/B	Units	Unit Price	Yr Blt	Cond. Cd	% Gd	Grade	Grade Adj.	Appr. Value
FPL3	Fireplace 2 sto	B	2	7000.00			84		0.00	11,800
FOP	Open Porch-ro	B	110	55.00			84		0.00	5,000
FOP	Open Porch-ro	B	120	55.00			84		0.00	5,300
SHED	Shed	L	168	18.00	2022		100		0.00	3,000
FPLG	Gas Fireplace-	B	1	2500.00			84		0.00	2,100

BUILDING SUB-AREA SUMMARY SECTION

Code	Description	Living Area	Floor Area	Eff Area	Unit Cost	Undeprec Value
BAS	First Floor	1,619	1,619	1,619	338.02	547,253
FHS	Half Story	514	1,027	514	169.17	173,742
FOP	Open Porch	0	110	0	0.00	0
FUS	Upper Story	1,619	1,619	1,619	338.02	547,253
	Ttl Gross Liv / Lease Area	3,752	4,375	3,752		1,268,248

Property Location 490 MAIN STREET (CENT.) Map ID 207/ 046/ / / Bldg Name State Use 1010
Vision ID 14530 Account # 125215 Bldg # 1 Sec # 2 of 2 Card # 2 of 2 Print Date 2/1/2024 3:52:22 PM

CURRENT OWNER

KERNS, JOHN J IV & NADINE

490 MAIN STREET

CENTERVILLE MA 02632

TOPO		UTILITIES		STRT / ROAD		LOCATION	
1	Level	2	Public Water	1	Paved		
		4	Gas				
		6	Septic				

SUPPLEMENTAL DATA

Alt Prcl ID
Split Zonin
BID Parcel
ResExpt Q YES:
#DL 1
#DL 2
GIS ID F_971120_2698715

Plan Ref. DEED DESCRIPT
Land Ct#
#SR
Life Estate
PP STATU
Assoc Pid#

CURRENT ASSESSMENT

Description	Code	Assessed	Assessed
RESIDNTL	1010	1,260,800	1,260,800
RES LAND	1010	534,000	534,000
	Total	1,794,800	1,794,800

801

FY2024
BARNSTABLE, MA

VISION

RECORD OF OWNERSHIP

	BK-VOL/PAGE		SALE DATE	Q/U	V/I	SALE PRIC	VC
KERNS, JOHN J IV & NADINE	30194	0024	12-27-2016	Q	I	790,000	00
TJLC LLC	25517	0279	06-20-2011	Q	I	850,000	00
CAMPBELL, GEORGE K & LORETTA TRS	12591	0334	10-07-1999	U	I	1	1A
CAMPBELL, GEORGE K & LORETTA	2520	0105	06-01-1977	U		0	

PREVIOUS ASSESSMENTS (HISTORY)

Year	Code	Assessed	Year	Code	Assessed V	Year	Code	Assessed
2023	1010	962,000	2022	1010	796,500	2021	1010	633,400
	1010	375,800		1010	319,000		1010	290,000
							1010	19,300
	Total	1,337,800		Total	1,115,500		Total	942,700

EXEMPTIONS

Year	Code	Description	Amount
2022	5C	RESIDENTIAL EXEMPTION	0.00
		Total	0.00

OTHER ASSESSMENTS

Code	Description	Number	Amount	Comm Int

This signature acknowledges a visit by a Data Collector or Assessor

ASSESSING NEIGHBORHOOD

Nbhd	Nbhd Name	B	Tracing	Batch
0109				CENVIL

NOTES

APPRAISED VALUE SUMMARY

Appraised Bldg. Value (Card)	1,205,100
Appraised Xf (B) Value (Bldg)	52,700
Appraised Ob (B) Value (Bldg)	3,000
Appraised Land Value (Bldg)	534,000
Special Land Value	0
Total Appraised Parcel Value	1,794,800
Valuation Method	C
Total Appraised Parcel Value	1,794,800

BUILDING PERMIT RECORD

Permit Id	Issue Date	Type	Description	Amount	Insp Date	% Comp	Date Comp	Comments
BLDR-21-14	12-06-2021	804	Addn Alt-Res	200,000	02-27-2023	80		Renovate kitchen, add patio
SHED-21-3	01-12-2021	863	Shed Registrati	0	06-30-2022	100	06-30-2022	
17-3936	12-26-2017	822	Insulation	2,964	04-17-2018	100	06-30-2018	INSULATION / WEATHERIZA
17-2449	08-03-2017	834	Sheet Metal	0	04-17-2018	100	06-30-2018	Installation of 3 Unico systems
17-1675	06-06-2017	880	Alt-Int work-Res	35,000	04-17-2018	100	06-30-2018	remodel 3 1/2 baths
16-1028	05-02-2016	835	Sid/Wind/Roof/	12,600	06-30-2016	100	06-30-2016	RE-ROOF STRIPPING OLD S

VISIT / CHANGE HISTORY

Date	Id	Type	Is	Cd	Purpost/Result
02-27-2023	SR	02		13	CALL BACK
09-07-2022	SR	01		13	CALL BACK
08-04-2021	LH	03		16	In Office Review
05-18-2020	WD			FR	Field Review
07-24-2018	LH	03		16	In Office Review
07-13-2018	SR	02		02	Bldg Permit Completed
02-22-2018	MD	22		22	Change of Address

LAND LINE VALUATION SECTION

B	Use Code	Description	Zone	LA	Land Units		Unit Price	Size Adj	AC Disc	Site Index	Cond.	Nbhd.	Nbhd. Adj	Notes	Location Adjustmen	Adj Unit P	Land Value
1	1010	Single Fam M-0	RD-	3	0.750	AC	176,344.00	1.30239	1.0000	5	1.00	0110	3.100		1.0000	711,971.2	534,000

Total Card Land Units 0.75 AC Parcel Total Land Area 0.75 Total Land Value 534,000

Property Location 490 MAIN STREET (CENT.) Map ID 207/ 046/ / / Bldg Name State Use 1010
Vision ID 14530 Account # 125215 Bldg # 1 Sec # 2 of 2 Card # 2 of 2 Print Date 2/1/2024 3:52:22 PM

CONSTRUCTION DETAIL

Element	Cd	Description
Style	06	Conventional
Model	01	Residential
Grade:	B+	Custom Plus
Stories	2.5	2 1/2 Stories
Exterior Wall 1	14	Wood Shingle
Exterior Wall 2	11	Clapboard
Roof Structure	03	Gable/Hip
Roof Cover	03	Asph/F Gls/Cmp
Interior Wall 1	03	Plastered
Interior Wall 2		
Interior Floor 1	09	Pine/Soft Wood
Interior Floor 2		
Heat Fuel	03	Gas
Heat Type	05	Hot Water
AC Type	03	Central
Bedrooms	06	6 Bedrooms
Full Baths	4	
Half Baths	0	
Extra Fixtures		
Total Rooms	10	10 Rooms
Bath Style		
Kitchen Style		
Occupancy		
Usrfld 105		
Accessory Apt		
Foundation Alt	11	Stone Ftgs
Rms Prts		
Bath Split	40	4 Full-0 Half

CONSTRUCTION DETAIL (CONTINUED)

Element	Cd	Description

CONDO DATA

Parcel Id		C		Owne	0.0
		B		S	

Adjust Type	Code	Description	Factor%
Condo Flr			
Condo Unit			

COST / MARKET VALUATION

Building Value New	1,443,004
Year Built	2022
Effective Year Built	2019
Depreciation Code	E
Remodel Rating	
Year Remodeled	
Depreciation %	0
Functional Obsol	0
External Obsol	0
Trend Factor	1
Condition	UC
Condition %	80
Percent Good	80
RCNLD	1,205,100
Dep % Ovr	
Dep Ovr Comment	
Misc Imp Ovr	
Misc Imp Ovr Comment	
Cost to Cure Ovr	
Cost to Cure Ovr Comment	

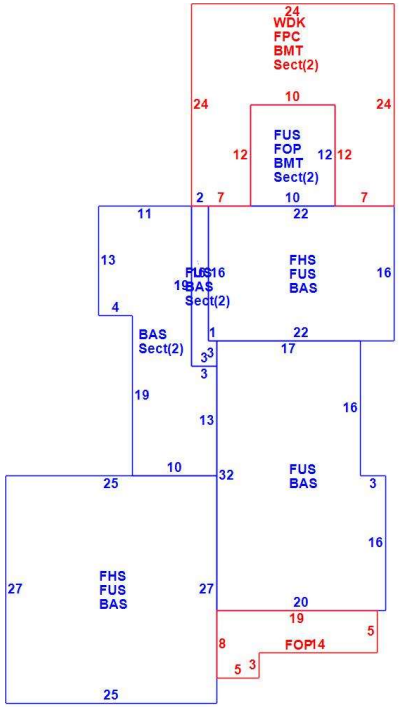

OB - OUTBUILDING & YARD ITEMS(L) / XF - BUILDING EXTRA FEATURES(B)

Code	Description	L/B	Units	Unit Price	Yr Blt	Cond. Cd	% Gd	Grade	Grade Adj.	Appr. Value
BMT	Basement-Unfi	B	576	26.01			80		0.00	14,900
FOPC	Open Prch-roo	B	456	55.00			80		0.00	13,600

BUILDING SUB-AREA SUMMARY SECTION

Code	Description	Living Area	Floor Area	Eff Area	Unit Cost	Undeprec Value
BAS	First Floor	356	356	356	338.02	120,335
BMT	Basement Area	0	576	0	0.00	0
FOP	Open Porch	0	120	0	0.00	0
FPC	Open Porch Conc. Floor	0	456	0	0.00	0
FUS	Upper Story	161	161	161	338.02	54,421
WDK	Wood Deck	0	456	0	0.00	0
	Ttl Gross Liv / Lease Area	517	2,125	517		174,756