Property Location 61 FOREST HILLS ROAD | Map ID 025/ 007/ 007/ / | Bldg Name | State Use 1010
Vision ID 1454 | Account # 401531 | Bldg # 1 | Sec # 1 of 1 | Card # 1 of 1 | Print Date 1/30/2024 3:14:14 PM

CURRENT OWNER

SCHIPANI, GILBERT A & MARCIA A

61 FOREST HILLS RD

COTUIT MA 02635

TOPO / UTILITIES / STRT / ROAD / LOCATION

SUPPLEMENTAL DATA

Alt Prcl ID		Plan Ref.	443/71
Split Zonin		Land Ct#	
BID Parcel		#SR	
ResExpt Q	YES:	Life Estate	
#DL 1	LOT 7	PP STATU	
#DL 2			
GIS ID	F_943861_2697722	Assoc Pid#	

CURRENT ASSESSMENT

Description	Code	Assessed	Assessed
RESIDNTL	1010	653,300	653,300
RES LAND	1010	174,000	174,000
	Total	827,300	827,300

801

FY2024
BARNSTABLE, MA

VISION

RECORD OF OWNERSHIP

	BK-VOL/PAGE		SALE DATE	Q/U	V/I	SALE PRIC	VC
SCHIPANI, GILBERT A & MARCIA A	15144	0117	05-10-2002	Q	I	418,605	00
MCSHANE CONSTRUCTION CO	12181	0134	04-06-1999	U	V	210,000	1
HOSTETTER, DANIEL C	4425	0272	02-15-1985	U	V	750,000	N

PREVIOUS ASSESSMENTS (HISTORY)

Year	Code	Assessed	Year	Code	Assessed V	Year	Code	Assessed
2023	1010	567,900	2022	1010	475,000	2021	1010	404,300
	1010	171,900		1010	122,200		1010	122,200
							1010	3,600
	Total	739,800		Total	597,200		Total	530,100

EXEMPTIONS

Year	Code	Description	Amount
2024	5C	RESIDENTIAL EXEMPTION	
		Total	0.00

OTHER ASSESSMENTS

Code	Description	Number	Amount	Comm Int

This signature acknowledges a visit by a Data Collector or Assessor

APPRAISED VALUE SUMMARY

Appraised Bldg. Value (Card)	594,600
Appraised Xf (B) Value (Bldg)	55,100
Appraised Ob (B) Value (Bldg)	3,600
Appraised Land Value (Bldg)	174,000
Special Land Value	0
Total Appraised Parcel Value	827,300
Valuation Method	C
Total Appraised Parcel Value	827,300

ASSESSING NEIGHBORHOOD

Nbhd	Nbhd Name	B	Tracing	Batch
0106				COTUIT

NOTES

BUILDING PERMIT RECORD

Permit Id	Issue Date	Type	Description	Amount	Insp Date	% Comp	Date Comp	Comments
EXPR-23-2	02-17-2023	835	Sid/Wind/Roof/	21,000		100		strip existing asphalt shingles.
55571	12-28-2001	DW	Dwelling	211,200	06-17-2002	100	01-01-2003	NW DW

VISIT / CHANGE HISTORY

Date	Id	Type	Is	Cd	Purpost/Result
07-10-2023	JO	03		16	In Office Review
11-03-2022	SR	02		03	Cycl Insp Comp
05-28-2020	DM			FR	Field Review
08-18-2014	JR	03		16	In Office Review
01-23-2013	RB	03		03	Cycl Insp Comp
08-13-2012	RB	03		16	In Office Review
09-29-2011	RB	03		16	In Office Review

LAND LINE VALUATION SECTION

B	Use Code	Description	Zone	LA	Land Units		Unit Price	Size Adj	AC Disc	Site Index	Cond.	Nbhd.	Nbhd. Adj	Notes	Location Adjustmen	Adj Unit P	Land Value
1	1010	Single Fam M-0	RF	2	0.320	AC	176,344.00	2.68059	1.0000	5	1.00	0106	1.150		1.0000	543,615.6	174,000

Total Card Land Units 0.32 AC | Parcel Total Land Area 0.32 | Total Land Value 174,000

Property Location 61 FOREST HILLS ROAD | Map ID 025/ 007/ 007/ / | Bldg Name | State Use 1010
Vision ID 1454 | Account # 401531 | Bldg # 1 | Sec # 1 of 1 | Card # 1 of 1 | Print Date 1/30/2024 3:14:14 PM

CONSTRUCTION DETAIL

Element	Cd	Description
Style	04	Cape Cod
Model	01	Residential
Grade:	C+	Average Plus
Stories	1.5	1 1/2 Stories
Exterior Wall 1	14	Wood Shingle
Exterior Wall 2	11	Clapboard
Roof Structure	03	Gable/Hip
Roof Cover	03	Asph/F Gls/Cmp
Interior Wall 1	03	Plastered
Interior Wall 2		
Interior Floor 1	12	Hardwood
Interior Floor 2	14	Carpet
Heat Fuel	03	Gas
Heat Type	04	Hot Air
AC Type	03	Central
Bedrooms	03	3 Bedrooms
Full Baths	2	
Half Baths	0	
Extra Fixtures		
Total Rooms	7	7 Rooms
Bath Style		
Kitchen Style		
Occupancy		
Usrfld 105		
Accessory Apt		
Foundation Alt	01	Poured Conc.
Rms Prts		
Bath Split	20	2 Full-0 Half

CONSTRUCTION DETAIL (CONTINUED)

Element	Cd	Description

CONDO DATA

Parcel Id		C	Owne
		B	S

Adjust Type	Code	Description	Factor%
Condo Flr			
Condo Unit			

COST / MARKET VALUATION

Building Value New	653,363
Year Built	2002
Effective Year Built	2007
Depreciation Code	A
Remodel Rating	
Year Remodeled	
Depreciation %	9
Functional Obsol	0
External Obsol	0
Trend Factor	1
Condition	
Condition %	
Percent Good	91
RCNLD	594,600
Dep % Ovr	
Dep Ovr Comment	
Misc Imp Ovr	
Misc Imp Ovr Comment	
Cost to Cure Ovr	
Cost to Cure Ovr Comment	

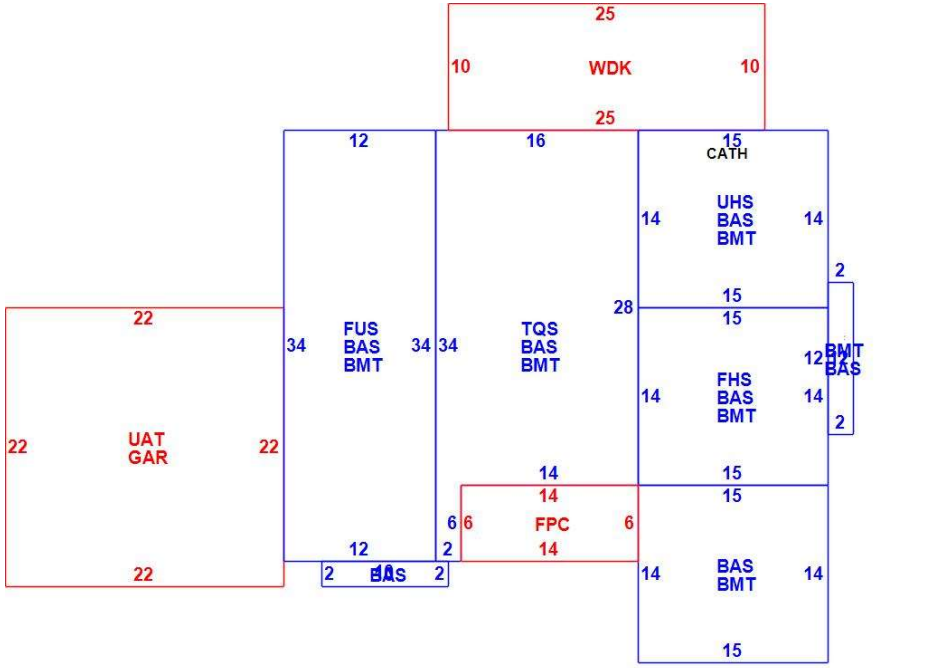

OB - OUTBUILDING & YARD ITEMS(L) / XF - BUILDING EXTRA FEATURES(B)

Code	Description	L/B	Units	Unit Price	Yr Blt	Cond. Cd	% Gd	Grade	Grade Adj.	Appr. Value
FPLG	Gas Fireplace-	B	1	2500.00	2009		91		0.00	2,300
WDC	Wood Deck w/	L	250	18.00	2006		74		0.00	3,600
FOPC	Open Prch-roo	B	84	55.00	2009		91		0.00	3,700
GAR	Attached Gara	B	484	40.00	2009		91		0.00	16,500
BMT	Basement-Unfi	B	1,522	26.01	2009		91		0.00	32,600

BUILDING SUB-AREA SUMMARY SECTION

Code	Description	Living Area	Floor Area	Eff Area	Unit Cost	Undeprec Value
BAS	First Floor	1,542	1,542	1,542	265.06	408,716
BMT	Basement Area	0	1,522	0	0.00	0
FHS	Half Story	105	210	105	132.53	27,831
FPC	Open Porch Conc. Floor	0	84	0	0.00	0
FUS	Upper Story	408	408	408	265.06	108,143
GAR	Attached Garage	0	484	0	0.00	0
TQS	Three Quarter Story	299	460	299	172.29	79,252
UAT	Attic, Unfinished	0	484	48	26.29	12,723
UHS	Half Story, Unfinished	0	210	63	79.52	16,699
WDK	Wood Deck	0	250	0	0.00	0
	Ttl Gross Liv / Lease Area	2,354	5,654	2,465		653,364