Property Location 7 PHEASANT WAY WEST | Map ID 208/ 147/ / / | Bldg Name | State Use 1010
Vision ID 14808 | Account # 127892 | Bldg # 1 | Sec # 1 of 1 | Card # 1 of 1 | Print Date 2/2/2024 8:27:56 AM

CURRENT OWNER

MURRAY, THOMAS S JR & BEVERLY

49 DELCOR DRIVE

WALPOLE MA 02081

TOPO		UTILITIES		STRT / ROAD		LOCATION	
1	Level	2	Public Water	1	Paved		
		4	Gas				
		6	Septic				

SUPPLEMENTAL DATA

Alt Prcl ID
Split Zonin
BID Parcel
ResExpt Q
#DL 1 LOT 1
#DL 2
GIS ID F_972950_2698961

Plan Ref. 122/97
Land Ct#
#SR
Life Estate THOMAS S JR &
PP STATU
Assoc Pid#

CURRENT ASSESSMENT

Description	Code	Assessed	Assessed
RESIDNTL	1010	439,200	439,200
RES LAND	1010	254,900	254,900
Total		694,100	694,100

801

FY2024
BARNSTABLE, MA

VISION

RECORD OF OWNERSHIP

	BK-VOL/PAGE		SALE DATE	Q/U	V/I	SALE PRIC	VC
MURRAY, THOMAS S JR & BEVERLY A	27530	0330	07-10-2013	U	I	100	1F
MURRAY, THOMAS S JR & BEVERLY A	12700	0188	12-02-1999	Q	I	207,500	00
KASICA, ANDREW M	10796	0260	06-12-1997	Q	I	177,500	00
ZAMPINO, LEONARD M & JOAN A	8802	0247	09-15-1993	Q	I	159,600	U
DACEY, BRIAN T TR	8191	0031	09-15-1992	Q	V	35,000	U

PREVIOUS ASSESSMENTS (HISTORY)

Year	Code	Assessed	Year	Code	Assessed V	Year	Code	Assessed
2023	1010	383,800	2022	1010	332,900	2021	1010	258,300
	1010	252,200		1010	161,600		1010	171,700
	Total	636,000		Total	494,500		Total	430,000

EXEMPTIONS

Year	Code	Description	Amount
		Total	0.00

OTHER ASSESSMENTS

Code	Description	Number	Amount	Comm Int

This signature acknowledges a visit by a Data Collector or Assessor

ASSESSING NEIGHBORHOOD

Nbhd	Nbhd Name	B	Tracing	Batch
0108				CENVIL

NOTES

APPRAISED VALUE SUMMARY

Appraised Bldg. Value (Card)	375,300
Appraised Xf (B) Value (Bldg)	61,500
Appraised Ob (B) Value (Bldg)	2,400
Appraised Land Value (Bldg)	254,900
Special Land Value	0
Total Appraised Parcel Value	694,100
Valuation Method	C
Total Appraised Parcel Value	694,100

BUILDING PERMIT RECORD

Permit Id	Issue Date	Type	Description	Amount	Insp Date	% Comp	Date Comp	Comments
201401682	03-25-2014	IN	Insulation	1,239	06-30-2014	100	06-30-2014	INSULATE-WEATHERIZE-AIR
20062833	08-31-2006	WD	Wood Deck	17,000	02-16-2007	100	06-30-2007	
B35900	05-01-1993	DW	Dwelling	90,000	01-15-1994	100		CE 1 STOR

VISIT / CHANGE HISTORY

Date	Id	Type	Is	Cd	Purpost/Result
03-26-2021	SR	02		03	Cycl Insp Comp
06-05-2020	LS			FR	Field Review
05-06-2011	JR	03		17	ATB Review
09-15-2009	PT	02		14	Cyclical Inspection
08-16-2007	JG	03		52	New Construction
02-16-2007	MF	02		02	Bldg Permit Completed
10-04-2001	PT	01		00	Meas/Listed-Interior Acces

LAND LINE VALUATION SECTION

B	Use Code	Description	Zone	LA	Land Units		Unit Price	Size Adj	AC Disc	Site Index	Cond.	Nbhd.	Nbhd. Adj	Notes	Location Adjustmen	Adj Unit P	Land Value
1	1010	Single Fam M-0	RC	3	0.280	AC	176,344.00	3.03702	1.0000	5	1.00	0108	1.700		1.0000	910,446.4	254,900

Total Card Land Units 0.28 AC | Parcel Total Land Area 0.28 | Total Land Value 254,900

Property Location 7 PHEASANT WAY WEST | Map ID 208/ 147/ / / | Bldg Name | State Use 1010
Vision ID 14808 | Account # 127892 | Bldg # 1 | Sec # 1 of 1 | Card # 1 of 1 | Print Date 2/2/2024 8:27:57 AM

CONSTRUCTION DETAIL

Element	Cd	Description
Style	01	Ranch
Model	01	Residential
Grade:	C	Average
Stories	1	1 Story
Exterior Wall 1	14	Wood Shingle
Exterior Wall 2		
Roof Structure	03	Gable/Hip
Roof Cover	03	Asph/F Gls/Cmp
Interior Wall 1	05	Drywall
Interior Wall 2		
Interior Floor 1	14	Carpet
Interior Floor 2	05	Vinyl/Asphalt
Heat Fuel	03	Gas
Heat Type	05	Hot Water
AC Type	03	Central
Bedrooms	03	3 Bedrooms
Full Baths	2	
Half Baths	0	
Extra Fixtures		
Total Rooms	6	6 Rooms
Bath Style		
Kitchen Style		
Occupancy		
Usrfld 105		
Accessory Apt		
Foundation Alt	01	Poured Conc.
Rms Prts		
Bath Split	20	2 Full-0 Half

CONSTRUCTION DETAIL (CONTINUED)

Element	Cd	Description

CONDO DATA

Parcel Id		C		Owne	0.0
		B		S	

Adjust Type	Code	Description	Factor%
Condo Flr			
Condo Unit			

COST / MARKET VALUATION

Building Value New	431,340
Year Built	1993
Effective Year Built	2002
Depreciation Code	A
Remodel Rating	
Year Remodeled	
Depreciation %	13
Functional Obsol	0
External Obsol	0
Trend Factor	1
Condition	
Condition %	
Percent Good	87
RCNLD	375,300
Dep % Ovr	
Dep Ovr Comment	
Misc Imp Ovr	
Misc Imp Ovr Comment	
Cost to Cure Ovr	
Cost to Cure Ovr Comment	

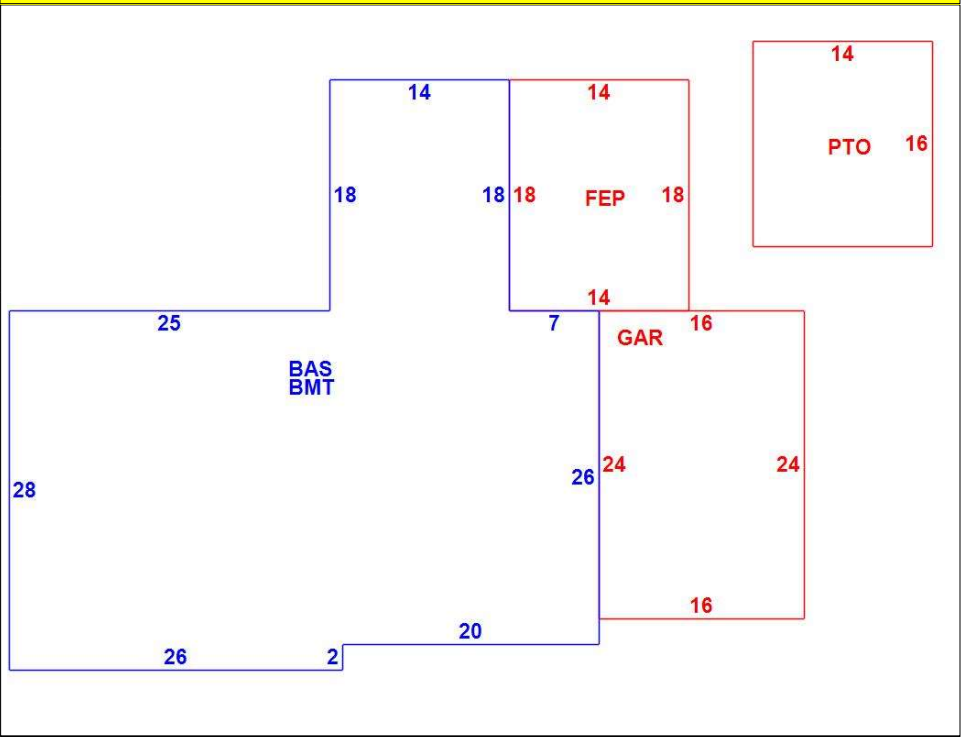

OB - OUTBUILDING & YARD ITEMS(L) / XF - BUILDING EXTRA FEATURES(B)

Code	Description	L/B	Units	Unit Price	Yr Blt	Cond. Cd	% Gd	Grade	Grade Adj.	Appr. Value
FPL1	Fireplace 1 sto	B	1	5000.00	2004		87		0.00	4,400
FEP	Enclosed porc	B	252	70.00	2004		87		0.00	12,700
GAR	Attached Gara	B	384	40.00	2004		87		0.00	13,600
BMT	Basement-Unfi	B	1,500	26.01	2004		87		0.00	30,800
PAT2	Patio-Good	L	224	9.94	2020		100		0.00	2,400

BUILDING SUB-AREA SUMMARY SECTION

Code	Description	Living Area	Floor Area	Eff Area	Unit Cost	Undeprec Value
BAS	First Floor	1,500	1,500	1,500	287.56	431,340
BMT	Basement Area	0	1,500	0	0.00	0
FEP	Enclosed Porch	0	252	0	0.00	0
GAR	Attached Garage	0	384	0	0.00	0
PTO	Patio	0	224	0	0.00	0
	Ttl Gross Liv / Lease Area	1,500	3,860	1,500		431,340