Property Location 335 LAKE ELIZABETH DRIVE | Map ID 227/ 012/ / / | Bldg Name | State Use 1010
Vision ID 15801 | Account # 137186 | Bldg # 1 | Sec # 1 of 1 | Card # 1 of 1 | Print Date 2/2/2024 10:19:03 AM

CURRENT OWNER

BALSAMO, ANTHONY V & MEGHAN

1381 HYMETTUS AVENUE

ENCINITAS CA 92024

TOPO		UTILITIES		STRT / ROAD		LOCATION	
2	Above Street	2	Public Water	1	Paved		
		4	Gas				
		6	Septic				

SUPPLEMENTAL DATA

Alt Prcl ID		Plan Ref.	118/3
Split Zonin		Land Ct#	
BID Parcel		#SR	
ResExpt Q		Life Estate	
#DL 1	LOT 3	PP STATU	
#DL 2			
GIS ID	F_975766_2697783	Assoc Pid#	

CURRENT ASSESSMENT

Description	Code	Assessed	Assessed
RESIDNTL	1010	380,700	380,700
RES LAND	1010	202,100	202,100
Total		582,800	582,800

801

FY2024
BARNSTABLE, MA

VISION

RECORD OF OWNERSHIP

	BK-VOL/PAGE		SALE DATE	Q/U	V/I	SALE PRIC	VC
BALSAMO, ANTHONY V & MEGHAN W	26836	0294	11-07-2012	Q	I	375,000	00
CARBERRY, ELLEN G	19294	0024	11-30-2004	U	I	460,000	1A
CARBERRY, JOHN C	13259	0231	09-26-2000	U	I	100	1A
CARBERRY, FRANCES K & JOHN C	12858	0298	03-01-2000	Q	I	185,000	00
DAVIS, HERBERT R & LILLIAN	4992	0085	04-15-1986	Q	I	90,000	U

PREVIOUS ASSESSMENTS (HISTORY)

Year	Code	Assessed	Year	Code	Assessed V	Year	Code	Assessed
2023	1010	297,200	2022	1010	277,800	2021	1010	234,900
	1010	183,700		1010	126,400		1010	128,300
							1010	7,500
	Total	480,900		Total	404,200		Total	370,700

EXEMPTIONS

Year	Code	Description	Amount
		Total	0.00

OTHER ASSESSMENTS

Code	Description	Number	Amount	Comm Int

This signature acknowledges a visit by a Data Collector or Assessor

ASSESSING NEIGHBORHOOD

Nbhd	Nbhd Name	B	Tracing	Batch
0107				CENVIL

NOTES

APPRAISED VALUE SUMMARY

Appraised Bldg. Value (Card)	341,700
Appraised Xf (B) Value (Bldg)	31,500
Appraised Ob (B) Value (Bldg)	7,500
Appraised Land Value (Bldg)	202,100
Special Land Value	0
Total Appraised Parcel Value	582,800
Valuation Method	C
Total Appraised Parcel Value	582,800

BUILDING PERMIT RECORD

Permit Id	Issue Date	Type	Description	Amount	Insp Date	% Comp	Date Comp	Comments
13536	02-29-1996	AD	Addition	17,000	09-22-1997	100	01-01-1997	remodel
B35680	03-01-1993	AD	Addition	10,000	01-15-1994	100		CE REMOD'
B35231	07-01-1992	AD	Addition	5,000	01-15-1994	100		CE REMOD'

VISIT / CHANGE HISTORY

Date	Id	Type	Is	Cd	Purpost/Result
05-18-2020	WD			FR	Field Review
09-04-2019	CK	22		22	Change of Address
03-12-2018	MD	22		22	Change of Address
02-01-2018	SR	02		03	Cycl Insp Comp
06-14-2016	AL	03		16	In Office Review
11-21-2012	TP	03		16	In Office Review
08-11-2006	JK	22		22	Change of Address

LAND LINE VALUATION SECTION

B	Use Code	Description	Zone	LA	Land Units		Unit Price	Size Adj	AC Disc	Site Index	Cond.	Nbhd.	Nbhd. Adj	Notes	Location Adjustmen	Adj Unit P	Land Value
1	1010	Single Fam M-0	RC	3	0.210	AC	176,344.00	3.89789	1.0000	5	1.00	0107	1.400		1.0000	962,326.8	202,100

Total Card Land Units 0.21 AC | Parcel Total Land Area 0.21 | Total Land Value 202,100

Property Location 335 LAKE ELIZABETH DRIVE | Map ID 227/ 012/ / / | Bldg Name | State Use 1010
Vision ID 15801 | Account # 137186 | Bldg # 1 | Sec # 1 of 1 | Card # 1 of 1 | Print Date 2/2/2024 10:19:03 AM

CONSTRUCTION DETAIL

Element	Cd	Description
Style	07	Modern/Contemp
Model	01	Residential
Grade:	C+	Average Plus
Stories	2	2 Stories
Exterior Wall 1	14	Wood Shingle
Exterior Wall 2		
Roof Structure	03	Gable/Hip
Roof Cover	03	Asph/F Gls/Cmp
Interior Wall 1	05	Drywall
Interior Wall 2		
Interior Floor 1	12	Hardwood
Interior Floor 2	14	Carpet
Heat Fuel	03	Gas
Heat Type	04	Hot Air
AC Type	01	None
Bedrooms	03	3 Bedrooms
Full Baths	2	
Half Baths	1	
Extra Fixtures		
Total Rooms	6	6 Rooms
Bath Style		
Kitchen Style		
Occupancy		
Usrfld 105		
Accessory Apt		
Foundation Alt	02	Conc. Block
Rms Prts		
Bath Split	21	2 Full-1 Half

CONSTRUCTION DETAIL (CONTINUED)

Element	Cd	Description

CONDO DATA

Parcel Id		C		Owne	0.0
		B		S	

Adjust Type	Code	Description	Factor%
Condo Flr			
Condo Unit			

COST / MARKET VALUATION

Building Value New	438,065
Year Built	1970
Effective Year Built	1991
Depreciation Code	A
Remodel Rating	
Year Remodeled	
Depreciation %	22
Functional Obsol	0
External Obsol	0
Trend Factor	1
Condition	
Condition %	
Percent Good	78
RCNLD	341,700
Dep % Ovr	
Dep Ovr Comment	
Misc Imp Ovr	
Misc Imp Ovr Comment	
Cost to Cure Ovr	
Cost to Cure Ovr Comment	

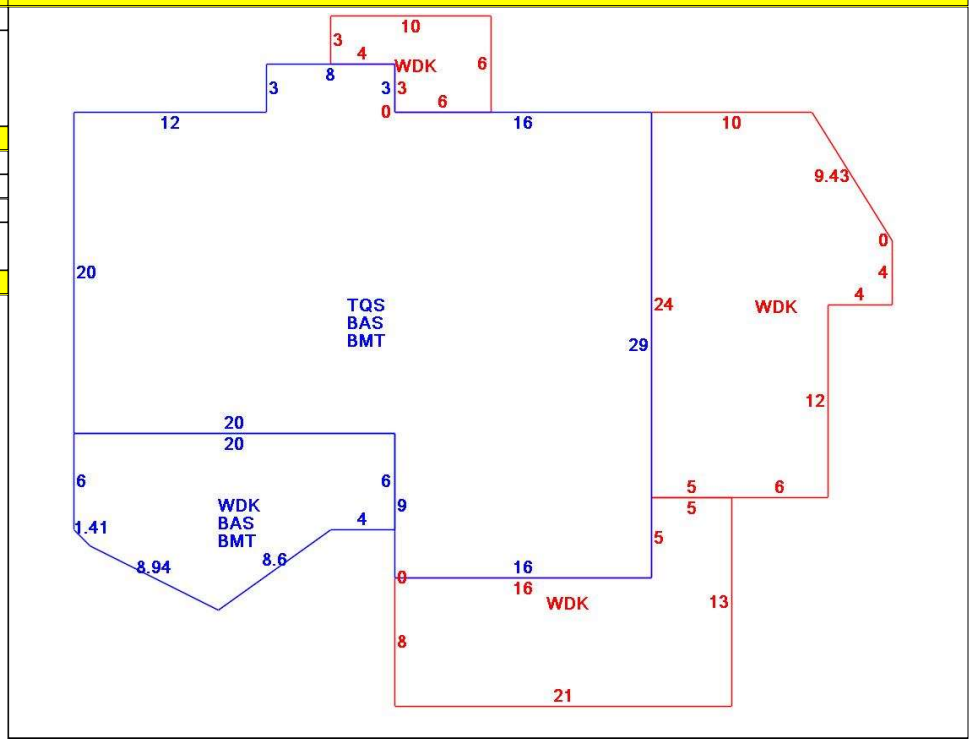

OB - OUTBUILDING & YARD ITEMS(L) / XF - BUILDING EXTRA FEATURES(B)

Code	Description	L/B	Units	Unit Price	Yr Blt	Cond. Cd	% Gd	Grade	Grade Adj.	Appr. Value
BRR	Bsmt Rec Rm-	B	864	8.05	1993		78		0.00	5,400
SHED	Shed	L	144	18.00	1990		42		0.00	1,100
FPL2	Fireplace 1.5 s	B	1	6000.00	1993		78		0.00	4,700
WDC	Wood Decking	L	488	20.00	1997		56		0.00	5,200
BMT	Basement-Unfi	B	1,050	26.01	1993		78		0.00	21,400
WDC	Wood Deck w/	L	48	18.00	1993		48		0.00	1,200

BUILDING SUB-AREA SUMMARY SECTION

Code	Description	Living Area	Floor Area	Eff Area	Unit Cost	Undeprec Value
BAS	First Floor	1,050	1,050	1,050	269.25	282,709
BMT	Basement Area	0	1,050	0	0.00	0
TQS	Three Quarter Story	577	888	577	174.95	155,356
WDK	Wood Deck	0	695	0	0.00	0
	Ttl Gross Liv / Lease Area	1,627	3,683	1,627		438,065