Property Location 100 HERRING RUN DRIVE | Map ID 229/ 045/ / / | Bldg Name | State Use 1090
Vision ID 16216 | Account # 141224 | Bldg # 1 | Sec # 1 of 1 | Card # 1 of 2 | Print Date 2/2/2024 11:07:05 AM

CURRENT OWNER

FEINBERG, MICHAEL A & ENA

185 WESTON ROAD

LINCOLN MA 01773

TOPO / UTILITIES / STRT / ROAD / LOCATION

TOPO	UTILITIES	STRT / ROAD	LOCATION
1 Level	2 Public Water	1 Paved	1 Lake/Pond Fro
	4 Gas		
	6 Septic		

SUPPLEMENTAL DATA

Alt Prcl ID		Plan Ref.	
Split Zonin		Land Ct#	20973-E
BID Parcel		#SR	
ResExpt Q		Life Estate	
#DL 1	LOTS 16 & 17	PP STATU	A:Active
#DL 2			
GIS ID	F_975757_2701157	Assoc Pid#	

CURRENT ASSESSMENT

Description	Code	Assessed	Assessed
RESIDNTL	1090	1,022,300	1,022,300
RES LAND	1090	508,500	508,500
Total		1,530,800	1,530,800

801

FY2024
BARNSTABLE, MA

VISION

RECORD OF OWNERSHIP

Owner	BK-VOL/PAGE		SALE DATE	Q/U	V/I	SALE PRIC	VC
FEINBERG, MICHAEL A & ENA	C198089	0	09-05-2012	Q	I	900,000	00
FEINSTEIN, MARK R & CINDY	C176854	0	06-01-2005	U	I	1,245,000	1A
SCIBELLI, MARK L & CATHERINE A	C176853	0	06-01-2005	U	I	1	1A
SCIBELLI, MARK	C126808	0	06-05-1992	U	I	160,000	L
SENTRY FEDERAL SAVINGS BANK	C118219	0	08-10-1989	U	I	1	B

PREVIOUS ASSESSMENTS (HISTORY)

Year	Code	Assessed	Year	Code	Assessed V	Year	Code	Assessed
2023	1090	819,600	2022	1090	724,200	2021	1090	589,600
	1090	598,700		1090	336,800		1090	359,300
							1090	43,800
	Total	1,418,300		Total	1,061,000		Total	992,700

EXEMPTIONS

Year	Code	Description	Amount
		Total	0.00

OTHER ASSESSMENTS

Code	Description	Number	Amount	Comm Int

This signature acknowledges a visit by a Data Collector or Assessor

ASSESSING NEIGHBORHOOD

Nbhd	Nbhd Name	B	Tracing	Batch
0110				CENVIL

NOTES

APPRAISED VALUE SUMMARY

Appraised Bldg. Value (Card)	934,700
Appraised Xf (B) Value (Bldg)	43,800
Appraised Ob (B) Value (Bldg)	43,800
Appraised Land Value (Bldg)	508,500
Special Land Value	0
Total Appraised Parcel Value	1,530,800
Valuation Method	C
Total Appraised Parcel Value	1,530,800

BUILDING PERMIT RECORD

Permit Id	Issue Date	Type	Description	Amount	Insp Date	% Comp	Date Comp	Comments
16-2185	03-22-2020	811	Demo - Access	5,000	04-28-2017	100	06-30-2017	Remove existing one bedroom
16-2635	09-29-2016	811	Demo - Access	5,000	04-28-2017	100	06-30-2017	DEMO EXISTING COTTAGE
16-2491	09-29-2016	827	New Const-De	200,000	04-28-2017	100	06-30-2017	rebuild of 1 bedroom cottage
16-1749	07-01-2016	833	Shd-Res-under	0	04-28-2017	100	06-30-2020	10x12
201507321	11-16-2015	RE	Remodel	30,000	04-28-2017	100	06-30-2017	REMODEL EXISTING GARAG
201505463	09-16-2015	AD	Addition	120,000	06-17-2016	100	06-30-2016	ADD 100 SQ FT TO 1ST FL F
B36721	05-01-1994	AD	Addition	92,000	01-15-1995	100	12-31-1995	CE ADD'N

VISIT / CHANGE HISTORY

Date	Id	Type	Is	Cd	Purpost/Result
06-03-2020	DM			FR	Field Review
05-26-2020	TR	03		16	In Office Review
06-06-2017	SR	01		02	Bldg Permit Completed
07-26-2016	JR	03		16	In Office Review
06-23-2016	SR	02		13	CALL BACK
04-27-2015	AL	22		22	Change of Address
06-14-2012	JR	03		16	In Office Review

LAND LINE VALUATION SECTION

B	Use Code	Description	Zone	LA	Land Units		Unit Price	Size Adj	AC Disc	Site Index	Cond.	Nbhd.	Nbhd. Adj	Notes	Location Adjustmen	Adj Unit P	Land Value
1	1090	Multi Hses M-01	RD-	3	0.630	AC	176,344.00	1.50069	1.0000	5	1.00	0111	3.050	LONG POND	1.0000	807,144.1	508,500

Total Card Land Units 0.63 AC | Parcel Total Land Area 0.63 | Total Land Value 508,500

Property Location 100 HERRING RUN DRIVE | Map ID 229/ 045/ / / | Bldg Name | State Use 1090
Vision ID 16216 | Account # 141224 | Bldg # 1 | Sec # 1 of 1 | Card # 1 of 2 | Print Date 2/2/2024 11:07:05 AM

CONSTRUCTION DETAIL

Element	Cd	Description
Style	07	Modern/Contemp
Model	01	Residential
Grade:	B	Custom
Stories	2	2 Stories
Exterior Wall 1	14	Wood Shingle
Exterior Wall 2	11	Clapboard
Roof Structure	03	Gable/Hip
Roof Cover	03	Asph/F Gls/Cmp
Interior Wall 1	05	Drywall
Interior Wall 2		
Interior Floor 1	14	Carpet
Interior Floor 2	12	Hardwood
Heat Fuel	03	Gas
Heat Type	05	Hot Water
AC Type	03	Central
Bedrooms	04	4 Bedrooms
Full Baths	3	
Half Baths	0	
Extra Fixtures		
Total Rooms	7	7 Rooms
Bath Style		
Kitchen Style		
Occupancy		
Usrfld 105	2	
Accessory Apt		
Foundation Alt	09	Blk/Pour Ftgs
Rms Prts		
Bath Split	30	3 Full-0 Half

CONSTRUCTION DETAIL (CONTINUED)

Element	Cd	Description

CONDO DATA

Parcel Id		C		Owne	0.0
		B		S	

Adjust Type	Code	Description	Factor%
Condo Flr			
Condo Unit			

COST / MARKET VALUATION

Building Value New	980,105
Year Built	1940
Effective Year Built	1999
Depreciation Code	E
Remodel Rating	
Year Remodeled	
Depreciation %	16
Functional Obsol	0
External Obsol	0
Trend Factor	1
Condition	
Condition %	
Percent Good	84
RCNLD	823,300
Dep % Ovr	
Dep Ovr Comment	
Misc Imp Ovr	
Misc Imp Ovr Comment	
Cost to Cure Ovr	
Cost to Cure Ovr Comment	

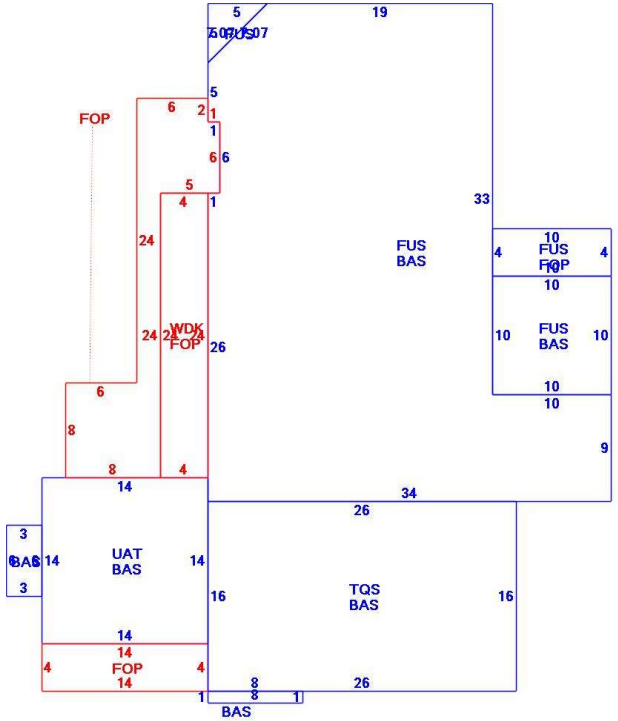

OB - OUTBUILDING & YARD ITEMS(L) / XF - BUILDING EXTRA FEATURES(B)

Code	Description	L/B	Units	Unit Price	Yr Blt	Cond. Cd	% Gd	Grade	Grade Adj.	Appr. Value
FPLG	Gas Fireplace-	B	1	2500.00	1999		84		0.00	2,100
FGR3	Garage-Good-	L	528	60.00	2015		96	00	1.00	30,400
WDC	Wood Decking	L	96	20.00	2001		64		0.00	2,200
FOP	Open Porch-ro	B	350	55.00	1999		84		0.00	11,500
GEN	Emergency Ge	L	1	5550.00	2015		92		0.00	5,100
ELV1	Elevator-Res-	B	1	33159.00	1999		84		0.00	27,900
SHED	Shed	L	120	18.00	2016		94		0.00	2,000

BUILDING SUB-AREA SUMMARY SECTION

Code	Description	Living Area	Floor Area	Eff Area	Unit Cost	Undeprec Value
BAS	First Floor	1,818	1,818	1,818	293.36	533,323
FOP	Open Porch	0	342	0	0.00	0
FUS	Upper Story	1,233	1,233	1,233	293.36	361,709
TQS	Three Quarter Story	270	416	270	190.40	79,206
UAT	Attic, Unfinished	0	196	20	29.93	5,867
WDK	Wood Deck	0	96	0	0.00	0
	Ttl Gross Liv / Lease Area	3,321	4,101	3,341		980,105

Property Location 100 HERRING RUN DRIVE | Map ID 229/ 045/ / / | Bldg Name | State Use 1090
Vision ID 16216 | Account # 141224 | Bldg # 2 | Sec # 1 of 1 | Card # 2 of 2 | Print Date 2/2/2024 11:07:06 AM

CURRENT OWNER

FEINBERG, MICHAEL A & ENA

185 WESTON ROAD

LINCOLN MA 01773

TOPO / UTILITIES / STRT / ROAD / LOCATION

TOPO	UTILITIES	STRT / ROAD	LOCATION
1 Level	2 Public Water	1 Paved	1 Lake/Pond Fro
	4 Gas		
	6 Septic		

SUPPLEMENTAL DATA

Alt Prcl ID		Plan Ref.	
Split Zonin		Land Ct#	20973-E
BID Parcel		#SR	
ResExpt Q		Life Estate	
#DL 1	LOTS 16 & 17	PP STATU	A:Active
#DL 2			
GIS ID	F_975757_2701157	Assoc Pid#	

CURRENT ASSESSMENT

Description	Code	Assessed	Assessed
RESIDNTL	1090	1,022,300	1,022,300
RES LAND	1090	508,500	508,500
Total		1,530,800	1,530,800

801

FY2024
BARNSTABLE, MA

VISION

RECORD OF OWNERSHIP

Owner	BK-VOL/PAGE		SALE DATE	Q/U	V/I	SALE PRIC	VC
FEINBERG, MICHAEL A & ENA	C198089	0	09-05-2012	Q	I	900,000	00
FEINSTEIN, MARK R & CINDY	C176854	0	06-01-2005	U	I	1,245,000	1A
SCIBELLI, MARK L & CATHERINE A	C176853	0	06-01-2005	U	I	1	1A
SCIBELLI, MARK	C126808	0	06-05-1992	U	I	160,000	L
SENTRY FEDERAL SAVINGS BANK	C118219	0	08-10-1989	U	I	1	B

PREVIOUS ASSESSMENTS (HISTORY)

Year	Code	Assessed	Year	Code	Assessed V	Year	Code	Assessed
2023	1090	819,600	2022	1090	724,200	2021	1090	589,600
	1090	598,700		1090	336,800		1090	359,300
							1090	43,800
	Total	1,418,300		Total	1,061,000		Total	992,700

EXEMPTIONS

Year	Code	Description	Amount
		Total	0.00

OTHER ASSESSMENTS

Code	Description	Number	Amount	Comm Int

This signature acknowledges a visit by a Data Collector or Assessor

APPRAISED VALUE SUMMARY

Appraised Bldg. Value (Card)	934,700
Appraised Xf (B) Value (Bldg)	43,800
Appraised Ob (B) Value (Bldg)	43,800
Appraised Land Value (Bldg)	508,500
Special Land Value	0
Total Appraised Parcel Value	1,530,800
Valuation Method	C
Total Appraised Parcel Value	1,530,800

ASSESSING NEIGHBORHOOD

Nbhd	Nbhd Name	B	Tracing	Batch
0110				CENVIL

NOTES

BUILDING PERMIT RECORD

Permit Id	Issue Date	Type	Description	Amount	Insp Date	% Comp	Date Comp	Comments

VISIT / CHANGE HISTORY

Date	Id	Type	Is	Cd	Purpost/Result

LAND LINE VALUATION SECTION

B	Use Code	Description	Zone	LA	Land Units		Unit Price	Size Adj	AC Disc	Site Index	Cond.	Nbhd.	Nbhd. Adj	Notes	Location Adjustmen		Adj Unit P	Land Value
2	1090	Multi Hses M-01	RD-	3	0	SF	0.00	1.00000	1.0000	5	1.00	0111	3.050			0.0000	0	0

Total Card Land Units 0.00 SF | Parcel Total Land Area 0.63 | Total Land Value 0

Property Location 100 HERRING RUN DRIVE | Map ID 229/ 045/ / / | Bldg Name | State Use 1090
Vision ID 16216 | Account # 141224 | Bldg # 2 | Sec # 1 of 1 | Card # 2 of 2 | Print Date 2/2/2024 11:07:06 AM

CONSTRUCTION DETAIL

Element	Cd	Description
Style	36	Cottage
Model	01	Residential
Grade:	C+	Average Plus
Stories	1	1 Story
Exterior Wall 1	14	Wood Shingle
Exterior Wall 2		
Roof Structure	03	Gable/Hip
Roof Cover	03	Asph/F Gls/Cmp
Interior Wall 1	05	Drywall
Interior Wall 2		
Interior Floor 1	12	Hardwood
Interior Floor 2		
Heat Fuel	04	Electric
Heat Type	03	Hot Air-No Duc
AC Type	01	None
Bedrooms	01	1 Bedroom
Full Baths	1	
Half Baths	0	
Extra Fixtures		
Total Rooms	3	3 Rooms
Bath Style		
Kitchen Style		
Occupancy		
Usrfld 105		
Accessory Apt		
Foundation Alt	09	Blk/Pour Ftgs
Rms Prts		
Bath Split	10	1 Full-0 Half

CONSTRUCTION DETAIL (CONTINUED)

Element	Cd	Description

CONDO DATA

Parcel Id		C		Owne	0.0
		B		S	

Adjust Type	Code	Description	Factor%
Condo Flr			
Condo Unit			

COST / MARKET VALUATION

Building Value New	116,084
Year Built	2016
Effective Year Built	2014
Depreciation Code	A
Remodel Rating	
Year Remodeled	
Depreciation %	4
Functional Obsol	0
External Obsol	0
Trend Factor	1
Condition	
Condition %	
Percent Good	96
RCNLD	111,400
Dep % Ovr	
Dep Ovr Comment	
Misc Imp Ovr	
Misc Imp Ovr Comment	
Cost to Cure Ovr	
Cost to Cure Ovr Comment	

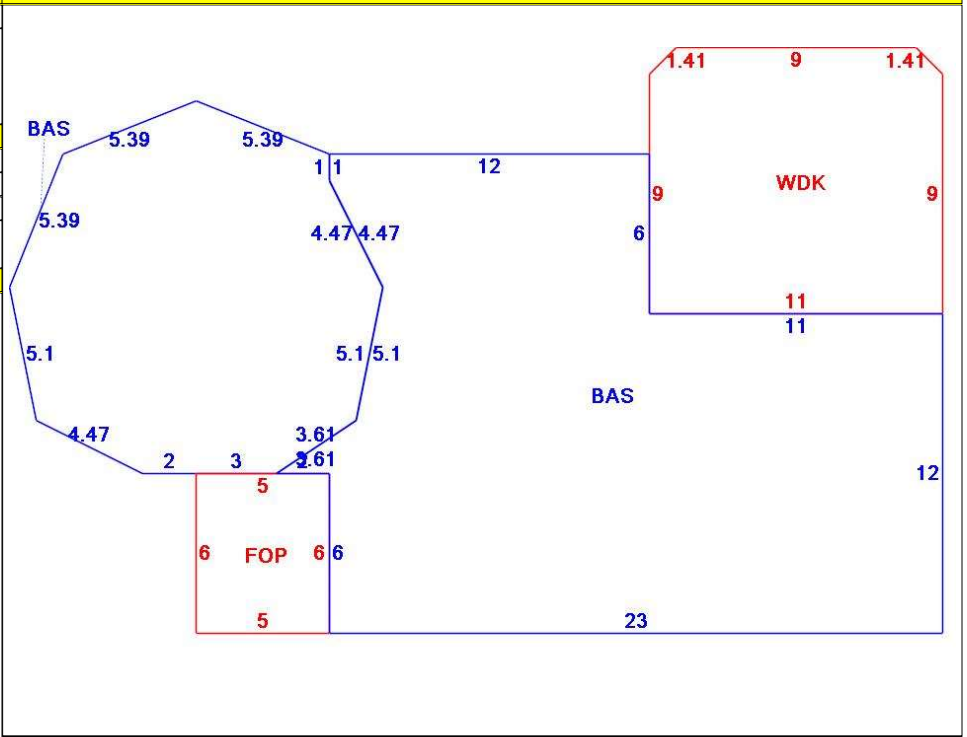

OB - OUTBUILDING & YARD ITEMS(L) / XF - BUILDING EXTRA FEATURES(B)

Code	Description	L/B	Units	Unit Price	Yr Blt	Cond. Cd	% Gd	Grade	Grade Adj.	Appr. Value
WDC	Deck composit	L	109	24.00	2016		94		0.00	4,100
FOP	Open Porch-ro	B	30	55.00	2018		96		0.00	2,300

BUILDING SUB-AREA SUMMARY SECTION

Code	Description	Living Area	Floor Area	Eff Area	Unit Cost	Undeprec Value
BAS	First Floor	489	489	489	237.39	116,084
FOP	Open Porch	0	30	0	0.00	0
WDK	Wood Deck	0	109	0	0.00	0
	Ttl Gross Liv / Lease Area	489	628	489		116,084