Property Location 77 TOBEY WAY | Map ID 247/ 226/ / / | Bldg Name | State Use 1010
Vision ID 17542 | Account # 355859 | Bldg # 1 | Sec # 1 of 1 | Card # 1 of 1 | Print Date 2/2/2024 3:32:26 PM

CURRENT OWNER

COLDWELL, BRANDON S & LINDSAY

UNIT 5270 BOX 404

DPO AE 09731

TOPO		UTILITIES		STRT / ROAD		LOCATION	
1	Level	2	Public Water	1	Paved		
		4	Gas				
		6	Septic				

SUPPLEMENTAL DATA

Alt Prcl ID		Plan Ref.	374/72
Split Zonin		Land Ct#	
BID Parcel		#SR	
ResExpt Q		Life Estate	
#DL 1	LOT 26	PP STATU	A:Active
#DL 2			
GIS ID	F_978788_2696708	Assoc Pid#	

CURRENT ASSESSMENT

Description	Code	Assessed	Assessed
RESIDNTL	1010	661,700	661,700
RES LAND	1010	237,300	237,300
Total		899,000	899,000

801

FY2024
BARNSTABLE, MA

VISION

RECORD OF OWNERSHIP

	BK-VOL/PAGE		SALE DATE	Q/U	V/I	SALE PRIC	VC
COLDWELL, BRANDON S & LINDSAY DA	32517	0285	12-04-2019	Q	I	535,000	00
LI, SHAN & LIN, HAIAN	23685	0019	05-08-2009	Q	I	382,500	00
DASILVA, GERALDO & ISMENIA	20229	0162	09-02-2005	U	I	1	1A
DASILVA, GERALDO P	20229	0145	09-02-2005	U	I	368,600	1L
MORT ELEC REG SYSTEMS, INC	19260	0212	11-19-2004	U	I	385,294	1L

PREVIOUS ASSESSMENTS (HISTORY)

Year	Code	Assessed	Year	Code	Assessed V	Year	Code	Assessed
2023	1010	582,800	2022	1010	483,400	2021	1010	391,700
	1010	215,700		1010	148,400		1010	150,700
							1010	15,300
	Total	798,500		Total	631,800		Total	557,700

EXEMPTIONS

Year	Code	Description	Amount
		Total	0.00

OTHER ASSESSMENTS

Code	Description	Number	Amount	Comm Int

This signature acknowledges a visit by a Data Collector or Assessor

ASSESSING NEIGHBORHOOD

Nbhd	Nbhd Name	B	Tracing	Batch
0106				HYAN

NOTES

APPRAISED VALUE SUMMARY

Appraised Bldg. Value (Card)	624,100
Appraised Xf (B) Value (Bldg)	22,300
Appraised Ob (B) Value (Bldg)	15,300
Appraised Land Value (Bldg)	237,300
Special Land Value	0
Total Appraised Parcel Value	899,000
Valuation Method	C
Total Appraised Parcel Value	899,000

BUILDING PERMIT RECORD

Permit Id	Issue Date	Type	Description	Amount	Insp Date	% Comp	Date Comp	Comments
20-3369	11-11-2020	822	Insulation	11,667		100		Insulation & weatherization
86960	09-19-2005	RE	Remodel	25,000	11-08-2006	100	06-30-2007	
86652	09-02-2005	NR	New Roof	10,000	11-08-2006	100	06-30-2007	
67981	04-08-2003	NS	New Siding	6,000	10-21-2004	100	01-01-2005	

VISIT / CHANGE HISTORY

Date	Id	Type	Is	Cd	Purpost/Result
08-01-2023	AG	22		22	Change of Address
07-02-2020	CK	03		16	In Office Review
05-19-2020	WD			FR	Field Review
04-28-2020	CK	22		22	Change of Address
02-27-2020	SAF			20	Sale Review
05-08-2015	JR	03		03	Cycl Insp Comp
10-09-2014	SR	01		03	Cycl Insp Comp

LAND LINE VALUATION SECTION

B	Use Code	Description	Zone	LA	Land Units		Unit Price	Size Adj	AC Disc	Site Index	Cond.	Nbhd.	Nbhd. Adj	Notes	Location Adjustmen	Adj Unit P	Land Value
1	1010	Single Fam M-0	RB	4	0.690	AC	176,344.00	1.39292	1.0000	5	1.00	0107	1.400		1.0000	343,888.4	237,300

Total Card Land Units 0.69 AC | Parcel Total Land Area 0.69 | Total Land Value 237,300

Property Location 77 TOBEY WAY | Map ID 247/ 226/ / / | Bldg Name | State Use 1010
Vision ID 17542 | Account # 355859 | Bldg # 1 | Sec # 1 of 1 | Card # 1 of 1 | Print Date 2/2/2024 3:32:27 PM

CONSTRUCTION DETAIL

Element	Cd	Description
Style	04	Cape Cod
Model	01	Residential
Grade:	C+	Average Plus
Stories	2	2 Stories
Exterior Wall 1	11	Clapboard
Exterior Wall 2		
Roof Structure	03	Gable/Hip
Roof Cover	03	Asph/F Gls/Cmp
Interior Wall 1	05	Drywall
Interior Wall 2		
Interior Floor 1	14	Carpet
Interior Floor 2	12	Hardwood
Heat Fuel	03	Gas
Heat Type	05	Hot Water
AC Type	01	None
Bedrooms	05	5 Bedrooms
Full Baths	3	
Half Baths	1	
Extra Fixtures		
Total Rooms	9	
Bath Style		
Kitchen Style		
Occupancy		
Usrfld 105		
Accessory Apt		
Foundation Alt	09	Blk/Pour Ftgs
Rms Prts		
Bath Split	31	3 Full-1 Half

CONSTRUCTION DETAIL (CONTINUED)

Element	Cd	Description

CONDO DATA

Parcel Id		C		Owne	0.0
		B		S	

Adjust Type	Code	Description	Factor%
Condo Flr			
Condo Unit			

COST / MARKET VALUATION

Building Value New	854,996
Year Built	1900
Effective Year Built	1984
Depreciation Code	G
Remodel Rating	
Year Remodeled	
Depreciation %	27
Functional Obsol	0
External Obsol	0
Trend Factor	1
Condition	
Condition %	
Percent Good	73
RCNLD	624,100
Dep % Ovr	
Dep Ovr Comment	
Misc Imp Ovr	
Misc Imp Ovr Comment	
Cost to Cure Ovr	
Cost to Cure Ovr Comment	

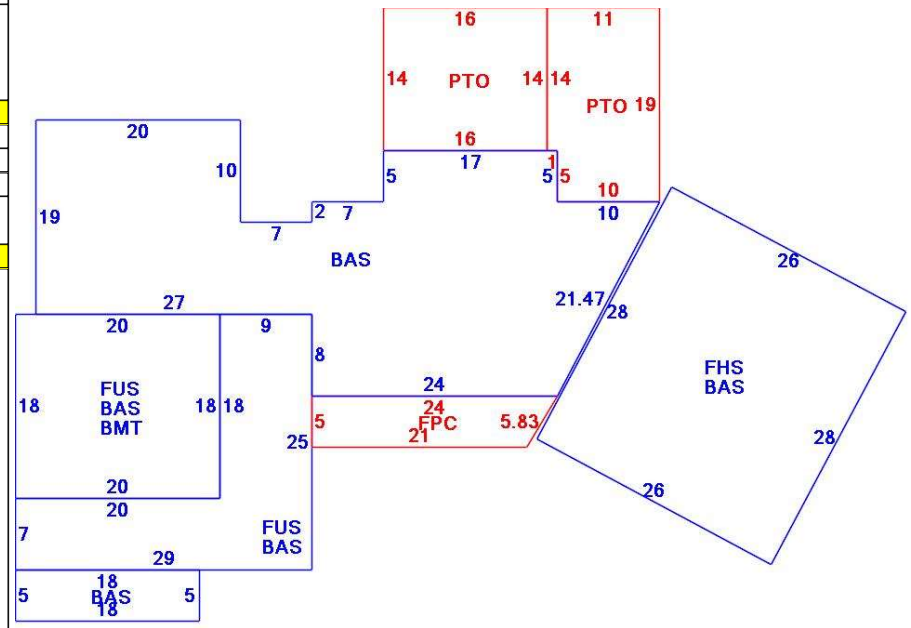

OB - OUTBUILDING & YARD ITEMS(L) / XF - BUILDING EXTRA FEATURES(B)

Code	Description	L/B	Units	Unit Price	Yr Blt	Cond. Cd	% Gd	Grade	Grade Adj.	Appr. Value
FPL2	Fireplace 1.5 s	B	2	6000.00	1984		73		0.00	8,800
GAZ1	Gazebo - Stan	L	1	12887.00	2007		76	00	1.00	9,800
PAT1	Patio- Average	L	224	5.89	1986		67		0.00	1,000
FOPC	Open Prch-roo	B	112	55.00	1984		73		0.00	3,600
BMT	Basement-Unfi	B	360	26.01	1984		73		0.00	9,900
PATF	Flagstone Pav	L	204	30.00	1986		67		0.00	4,500

BUILDING SUB-AREA SUMMARY SECTION

Code	Description	Living Area	Floor Area	Eff Area	Unit Cost	Undeprec Value
BAS	First Floor	2,622	2,622	2,622	230.40	604,096
BMT	Basement Area	0	360	0	0.00	0
FHS	Half Story	364	728	364	115.20	83,864
FPC	Open Porch Conc. Floor	0	113	0	0.00	0
FUS	Upper Story	725	725	725	230.40	167,036
PTO	Patio	0	428	0	0.00	0
	Ttl Gross Liv / Lease Area	3,711	4,976	3,711		854,996