Property Location 88 ELLIOTT ROAD | Map ID 248/ 055/ / / | Bldg Name | State Use 1010
Vision ID 17609 | Account # 154157 | Bldg # 1 | Sec # 1 of 1 | Card # 1 of 1 | Print Date 2/2/2024 3:40:11 PM

CURRENT OWNER

KONKOL, ALYSON C

88 ELLIOTT ROAD

CENTERVILLE MA 02632

TOPO / UTILITIES / STRT / ROAD / LOCATION

TOPO		UTILITIES		STRT / ROAD		LOCATION	
1	Level	2	Public Water	1	Paved		
		4	Gas				
		6	Septic				

SUPPLEMENTAL DATA

Alt Prcl ID		Plan Ref.	228/157
Split Zonin		Land Ct#	
BID Parcel		#SR	
ResExpt Q	YES:	Life Estate	
#DL 1	PART OF LOT 1	PP STATU	
#DL 2			
GIS ID	F_976932_2699511	Assoc Pid#	

CURRENT ASSESSMENT

Description	Code	Assessed	Assessed
RESIDNTL	1010	410,600	410,600
RES LAND	1010	213,100	213,100
Total		623,700	623,700

801

FY2024
BARNSTABLE, MA

VISION

RECORD OF OWNERSHIP

RECORD OF OWNERSHIP	BK-VOL/PAGE		SALE DATE	Q/U	V/I	SALE PRIC	VC
KONKOL, ALYSON C	23148	0251	09-11-2008	U	I	1	1
KONKOL, THOMAS M & ALYSON C	13599	0320	02-28-2001	Q	I	257,500	00
HYLAND, ROBERT J &ELIZABETH	5448	0340	12-15-1986	Q	I	128,000	U
JOHNSON, MARYANNE M & CARL	5217	0211	07-15-1986	U	I	1	A
JOHNSON, MARYANNE M	2241	0042	09-29-1975	Q		25,000	U

PREVIOUS ASSESSMENTS (HISTORY)

Year	Code	Assessed	Year	Code	Assessed V	Year	Code	Assessed
2023	1010	352,800	2022	1010	296,300	2021	1010	221,800
	1010	193,800		1010	133,300		1010	135,300
							1010	28,500
	Total	546,600		Total	429,600		Total	385,600

EXEMPTIONS

Year	Code	Description	Amount
2010	5C	RESIDENTIAL EXEMPTION	0.00
		Total	0.00

OTHER ASSESSMENTS

Code	Description	Number	Amount	Comm Int

This signature acknowledges a visit by a Data Collector or Assessor

ASSESSING NEIGHBORHOOD

Nbhd	Nbhd Name	B	Tracing	Batch
0107				CENVIL

NOTES

APPRAISED VALUE SUMMARY

Appraised Bldg. Value (Card)	357,500
Appraised Xf (B) Value (Bldg)	24,600
Appraised Ob (B) Value (Bldg)	28,500
Appraised Land Value (Bldg)	213,100
Special Land Value	0
Total Appraised Parcel Value	623,700
Valuation Method	C
Total Appraised Parcel Value	623,700

BUILDING PERMIT RECORD

Permit Id	Issue Date	Type	Description	Amount	Insp Date	% Comp	Date Comp	Comments
EXPR-23-2	02-15-2023	835	Sid/Wind/Roof/	5,000		100		sidewall shingle replacement fr
200904345	09-28-2009	RE	Remodel	70,000	04-14-2010	100	06-30-2011	REPL EX DECK;WINDOWS;R
52447	04-24-2001	NR	New Roof	2,500	01-01-2002	100		
B31957	06-01-1988	AD	Addition	12,945	01-15-1989	100		CE GARAGE
B28875	01-01-1986	AD	Addition	15,000	01-15-1987	100		CE REMOD'

VISIT / CHANGE HISTORY

Date	Id	Type	Is	Cd	Purpost/Result
06-03-2020	DM			FR	Field Review
02-27-2015	SR	02		14	Cyclical Inspection
03-10-2011	RB	03		02	Bldg Permit Completed
05-07-2010	PT	04		44	Drive by inspection only
04-14-2010	MK	02		52	New Construction
03-25-2002	MF	04		44	Drive by inspection only
10-24-2001	PT	01		00	Meas/Listed-Interior Acces

LAND LINE VALUATION SECTION

B	Use Code	Description	Zone	LA	Land Units		Unit Price	Size Adj	AC Disc	Site Index	Cond.	Nbhd.	Nbhd. Adj	Notes	Location Adjustmen	Adj Unit P	Land Value
1	1010	Single Fam M-0	RB	3	0.350	AC	176,344.00	2.46674	1.0000	5	1.00	0107	1.400		1.0000	608,986.3	213,100

Total Card Land Units 0.35 AC | Parcel Total Land Area 0.35 | Total Land Value 213,100

Property Location 88 ELLIOTT ROAD | Map ID 248/ 055/ / / | Bldg Name | State Use 1010
Vision ID 17609 | Account # 154157 | Bldg # 1 | Sec # 1 of 1 | Card # 1 of 1 | Print Date 2/2/2024 3:40:11 PM

CONSTRUCTION DETAIL

Element	Cd	Description
Style	06	Conventional
Model	01	Residential
Grade:	C	Average
Stories	1.5	1 1/2 Stories
Exterior Wall 1	14	Wood Shingle
Exterior Wall 2		
Roof Structure	03	Gable/Hip
Roof Cover	03	Asph/F Gls/Cmp
Interior Wall 1	05	Drywall
Interior Wall 2		
Interior Floor 1	12	Hardwood
Interior Floor 2	09	Pine/Soft Wood
Heat Fuel	03	Gas
Heat Type	05	Hot Water
AC Type	01	None
Bedrooms	04	4 Bedrooms
Full Baths	3	
Half Baths	0	
Extra Fixtures		
Total Rooms	7	7 Rooms
Bath Style		
Kitchen Style		
Occupancy		
Usrfld 105		
Accessory Apt		
Foundation Alt	08	Mixed
Rms Prts		
Bath Split	30	3 Full-0 Half

CONSTRUCTION DETAIL (CONTINUED)

Element	Cd	Description

CONDO DATA

Parcel Id		C		Owne	0.0
		B		S	

Adjust Type	Code	Description	Factor%
Condo Flr			
Condo Unit			

COST / MARKET VALUATION

Building Value New	489,782
Year Built	1840
Effective Year Built	1984
Depreciation Code	G
Remodel Rating	
Year Remodeled	
Depreciation %	27
Functional Obsol	0
External Obsol	0
Trend Factor	1
Condition	
Condition %	
Percent Good	73
RCNLD	357,500
Dep % Ovr	
Dep Ovr Comment	
Misc Imp Ovr	
Misc Imp Ovr Comment	
Cost to Cure Ovr	
Cost to Cure Ovr Comment	

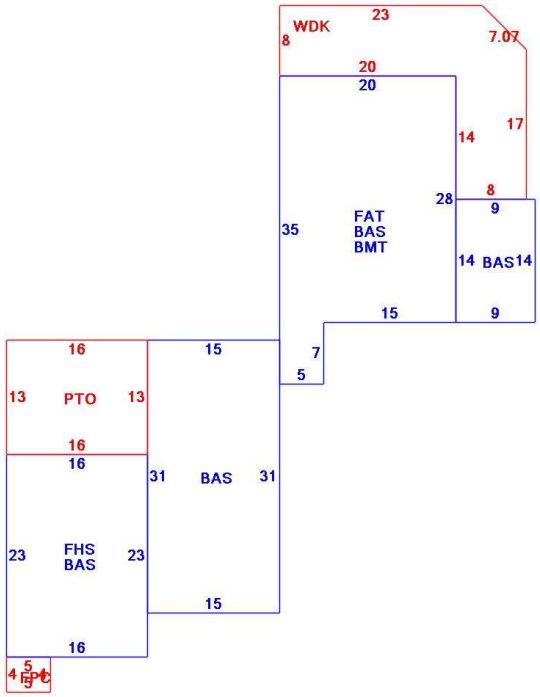

OB - OUTBUILDING & YARD ITEMS(L) / XF - BUILDING EXTRA FEATURES(B)

Code	Description	L/B	Units	Unit Price	Yr Blt	Cond. Cd	% Gd	Grade	Grade Adj.	Appr. Value
FGR6	Gar w/Lft Avg	L	528	60.00	1988		69	00	1.00	21,900
FPL1	Fireplace 1 sto	B	1	5000.00	1984		73		0.00	3,700
BFA	Bsmt Fin-Avg	B	468	17.36	1984		73		0.00	5,900
WDC	Deck comp w	L	324	28.00	1996		54		0.00	4,900
PAT2	Patio-Good	L	208	9.94	1996		77		0.00	1,700
FOPC	Open Prch-roo	B	20	55.00	1984		73		0.00	1,100
BMT	Basement-Unfi	B	595	26.01	1984		73		0.00	13,900

BUILDING SUB-AREA SUMMARY SECTION

Code	Description	Living Area	Floor Area	Eff Area	Unit Cost	Undeprec Value
BAS	First Floor	1,554	1,554	1,554	268.08	416,596
BMT	Basement Area	0	595	0	0.00	0
FAT	Attic, Finished	89	595	89	40.10	23,859
FHS	Half Story	184	368	184	134.04	49,327
FPC	Open Porch Conc. Floor	0	20	0	0.00	0
PTO	Patio	0	208	0	0.00	0
WDK	Wood Deck	0	324	0	0.00	0
	Ttl Gross Liv / Lease Area	1,827	3,664	1,827		489,782