Property Location 162 COTTONWOOD LANE | Map ID 252/ 026/ / / | Bldg Name | State Use 1010
Vision ID 18630 | Account # 163496 | Bldg # 1 | Sec # 1 of 1 | Card # 1 of 2 | Print Date 2/2/2024 5:31:54 PM

CURRENT OWNER

EATON, EDWARD BRADFORD & DO

162 COTTONWOOD LANE

CENTERVILLE MA 02632

TOPO	UTILITIES	STRT / ROAD	LOCATION
1 Level	2 Public Water	1 Paved	1 Lake/Pond Fro
	4 Gas		1 Excel View
	6 Septic		

SUPPLEMENTAL DATA

Alt Prcl ID		Plan Ref.	
Split Zonin		Land Ct#	20239-C (SH 8)
BID Parcel		#SR	
ResExpt Q	YES:	Life Estate	
#DL 1	LOT 146	PP STATU	
#DL 2			
GIS ID	F_977795_2708193	Assoc Pid#	

CURRENT ASSESSMENT

Description	Code	Assessed	Assessed
RESIDNTL	1010	399,900	399,900
RES LAND	1010	478,100	478,100
Total		878,000	878,000

801

FY2024
BARNSTABLE, MA

VISION

RECORD OF OWNERSHIP

	BK-VOL/PAGE		SALE DATE	Q/U	V/I	SALE PRIC	VC
EATON, EDWARD BRADFORD & DONNA	C225562	0	03-10-2021	Q	I	725,000	00
MONROE, DENISE M	C209388	0	04-29-2016	Q	I	479,000	00
LANDON, SUSAN D TR	D128392	0	12-08-2015	U	I	0	1A
LANDON, RICHARD W & SUSAN D TRS	C183148	0	05-23-2007	U	I	100	1A
LANDON, RICHARD W & SUSAN D	C161910	0	06-21-2001	Q	I	404,500	00

PREVIOUS ASSESSMENTS (HISTORY)

Year	Code	Assessed	Year	Code	Assessed V	Year	Code	Assessed
2023	1010	350,600	2022	1010	312,800	2021	1010	228,600
	1010	336,500		1010	285,600		1010	259,600
							1010	16,700
	Total	687,100		Total	598,400		Total	504,900

EXEMPTIONS

Year	Code	Description	Amount
2023	5C	RESIDENTIAL EXEMPTION	0.00
2024	22C	VET (SPECIAL HOUSING)	
		Total	0.00

OTHER ASSESSMENTS

Code	Description	Number	Amount	Comm Int

This signature acknowledges a visit by a Data Collector or Assessor

ASSESSING NEIGHBORHOOD

Nbhd	Nbhd Name	B	Tracing	Batch
0109				CENVIL

NOTES

APPRAISED VALUE SUMMARY

Appraised Bldg. Value (Card)	310,100
Appraised Xf (B) Value (Bldg)	73,100
Appraised Ob (B) Value (Bldg)	16,700
Appraised Land Value (Bldg)	478,100
Special Land Value	0
Total Appraised Parcel Value	878,000
Valuation Method	C
Total Appraised Parcel Value	878,000

BUILDING PERMIT RECORD

Permit Id	Issue Date	Type	Description	Amount	Insp Date	% Comp	Date Comp	Comments
EXPR-22-6	04-27-2022	835	Sid/Wind/Roof/	1,326		100		Install R-19 faced fg batts to b
EXPR-22-2	02-15-2022	835	Sid/Wind/Roof/	2,325		100		Install R-38 fg and R-26 cellulo
20064922	11-30-2007	FB	Finish Basemen	28,880	04-16-2008	100	06-30-2008	BFA 322 SQFT
80053	10-20-2004	RA	Remodel-Additi	18,000	07-20-2005	100	01-01-2005	
78944	08-17-2004	NR	New Roof	6,000	02-11-2005	100	01-01-2005	

VISIT / CHANGE HISTORY

Date	Id	Type	Is	Cd	Purpost/Result
07-10-2023	EG	03		16	In Office Review
08-08-2022	EG	03		16	In Office Review
07-26-2022	EG	03		16	In Office Review
07-25-2022	EG	03		16	In Office Review
01-14-2022	BM	22		22	Change of Address
09-03-2021	BM	03		16	In Office Review
04-21-2020	WD			FR	Field Review

LAND LINE VALUATION SECTION

B	Use Code	Description	Zone	LA	Land Units		Unit Price	Size Adj	AC Disc	Site Index	Cond.	Nbhd.	Nbhd. Adj	Notes	Location Adjustmen	Adj Unit P	Land Value
1	1010	Single Fam M-0	RD-	3	0.410	AC	176,344.00	2.13291	1.0000	5	1.00	0110	3.100	SHALLOW POND	1.0000	1,165,986	478,100

Total Card Land Units 0.41 AC | Parcel Total Land Area 0.41 | Total Land Value 478,100

Property Location 162 COTTONWOOD LANE | Map ID 252/ 026/ / / | Bldg Name | State Use 1010
Vision ID 18630 | Account # 163496 | Bldg # 1 | Sec # 1 of 1 | Card # 1 of 2 | Print Date 2/2/2024 5:31:55 PM

CONSTRUCTION DETAIL

Element	Cd	Description
Style	01	Ranch
Model	01	Residential
Grade:	C+	Average Plus
Stories	1	1 Story
Exterior Wall 1	25	Vinyl Siding
Exterior Wall 2	13	T111 Siding
Roof Structure	03	Gable/Hip
Roof Cover	03	Asph/F Gls/Cmp
Interior Wall 1	03	Plastered
Interior Wall 2		
Interior Floor 1	14	Carpet
Interior Floor 2		
Heat Fuel	03	Gas
Heat Type	05	Hot Water
AC Type	03	Central
Bedrooms	03	3 Bedrooms
Full Baths	2	
Half Baths	1	
Extra Fixtures		
Total Rooms	7	
Bath Style		
Kitchen Style		
Occupancy		
Usrfld 105		
Accessory Apt		
Foundation Alt	01	Poured Conc.
Rms Prts		
Bath Split	21	2 Full-1 Half

CONSTRUCTION DETAIL (CONTINUED)

Element	Cd	Description

CONDO DATA

Parcel Id		C		Owne	0.0
		B		S	

Adjust Type	Code	Description	Factor%
Condo Flr			
Condo Unit			

COST / MARKET VALUATION

Building Value New	397,609
Year Built	1960
Effective Year Built	1991
Depreciation Code	G
Remodel Rating	
Year Remodeled	
Depreciation %	22
Functional Obsol	0
External Obsol	0
Trend Factor	1
Condition	
Condition %	
Percent Good	78
RCNLD	310,100
Dep % Ovr	
Dep Ovr Comment	
Misc Imp Ovr	
Misc Imp Ovr Comment	
Cost to Cure Ovr	
Cost to Cure Ovr Comment	

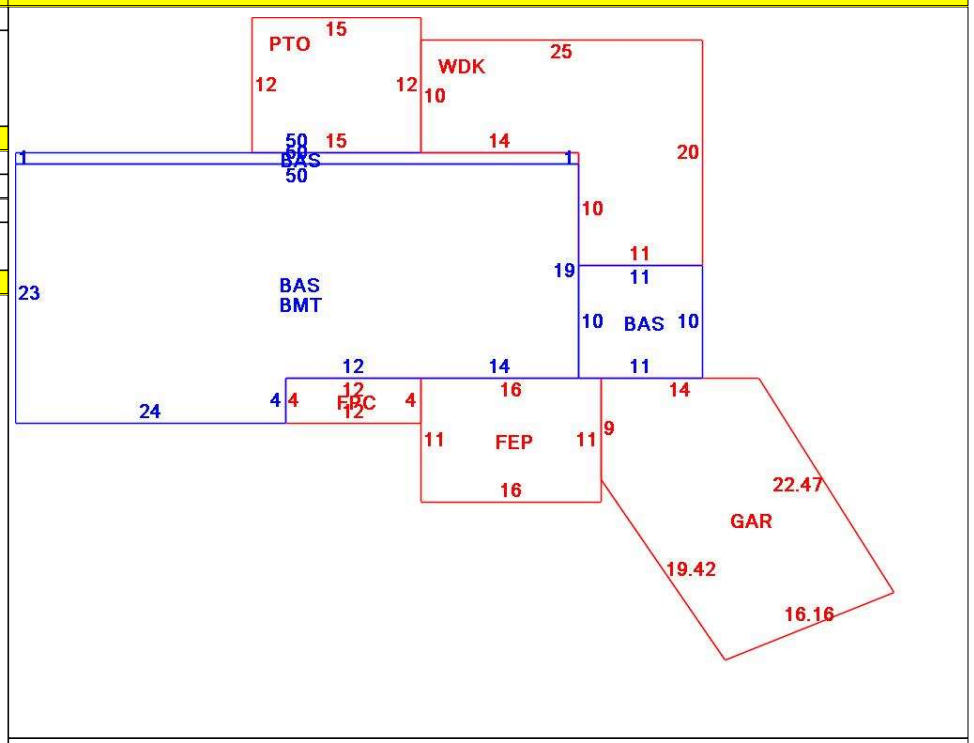

OB - OUTBUILDING & YARD ITEMS(L) / XF - BUILDING EXTRA FEATURES(B)

Code	Description	L/B	Units	Unit Price	Yr Blt	Cond. Cd	% Gd	Grade	Grade Adj.	Appr. Value
FPL1	Fireplace 1 sto	B	1	5000.00	1993		78		0.00	3,900
BFA1	Bsmt Fin-Goo	B	948	32.56	1993		78		0.00	24,100
DKPL	Pond Dock-Lig	L	1	4200.00	1990		100		0.00	4,200
WDC	Wood Decking	L	360	20.00	1993		48		0.00	3,400
FOPC	Open Prch-roo	B	48	55.00	1993		78		0.00	2,200
FEP	Enclosed porc	B	176	70.00	1993		78		0.00	9,100
GAR	Attached Gara	B	403	40.00	1993		78		0.00	12,500
BMT	Basement-Unfi	B	1,046	26.01	1993		78		0.00	21,300
SOLT	Solar Thermal	B	48	86.00	1993		0		0.00	0
PAT2	Patio-Good	L	180	9.94	2017		98		0.00	2,000

BUILDING SUB-AREA SUMMARY SECTION

Code	Description	Living Area	Floor Area	Eff Area	Unit Cost	Undeprec Value
BAS	First Floor	1,206	1,206	1,206	329.69	397,609
BMT	Basement Area	0	1,046	0	0.00	0
FEP	Enclosed Porch	0	176	0	0.00	0
FPC	Open Porch Conc. Floor	0	48	0	0.00	0
GAR	Attached Garage	0	403	0	0.00	0
PTO	Patio	0	180	0	0.00	0
WDK	Wood Deck	0	360	0	0.00	0
	Ttl Gross Liv / Lease Area	1,206	3,419	1,206		397,609

Property Location 162 COTTONWOOD LANE | Map ID 252/ 026/ / / | Bldg Name | State Use 1010
Vision ID 18630 | Account # 163496 | Bldg # 1 | Sec # 1 of 1 | Card # 2 of 2 | Print Date 2/2/2024 5:31:55 PM

CURRENT OWNER

EATON, EDWARD BRADFORD & DO

162 COTTONWOOD LANE

CENTERVILLE MA 02632

TOPO	UTILITIES	STRT / ROAD	LOCATION
1 Level	2 Public Water	1 Paved	1 Lake/Pond Fro
	4 Gas		1 Excel View
	6 Septic		

SUPPLEMENTAL DATA

Alt Prcl ID		Plan Ref.	
Split Zonin		Land Ct#	20239-C (SH 8)
BID Parcel		#SR	
ResExpt Q	YES:	Life Estate	
#DL 1	LOT 146	PP STATU	
#DL 2			
GIS ID	F_977795_2708193	Assoc Pid#	

CURRENT ASSESSMENT

Description	Code	Assessed	Assessed
RESIDNTL	1010	399,900	399,900
RES LAND	1010	478,100	478,100
Total		878,000	878,000

801

FY2024
BARNSTABLE, MA

VISION

RECORD OF OWNERSHIP

BK-VOL/PAGE		SALE DATE	Q/U	V/I	SALE PRIC	VC

PREVIOUS ASSESSMENTS (HISTORY)

Year	Code	Assessed	Year	Code	Assessed V	Year	Code	Assessed
2023	1010	350,600	2022	1010	312,800	2021	1010	228,600
	1010	336,500		1010	285,600		1010	259,600
							1010	16,700
	Total	687,100		Total	598,400		Total	504,900

EXEMPTIONS

Year	Code	Description	Amount
		Total	

OTHER ASSESSMENTS

Code	Description	Number	Amount	Comm Int

This signature acknowledges a visit by a Data Collector or Assessor

ASSESSING NEIGHBORHOOD

Nbhd	Nbhd Name	B	Tracing	Batch
0109				CENVIL

NOTES

APPRAISED VALUE SUMMARY

Appraised Bldg. Value (Card)	310,100
Appraised Xf (B) Value (Bldg)	73,100
Appraised Ob (B) Value (Bldg)	16,700
Appraised Land Value (Bldg)	478,100
Special Land Value	0
Total Appraised Parcel Value	878,000
Valuation Method	C
Total Appraised Parcel Value	878,000

BUILDING PERMIT RECORD

Permit Id	Issue Date	Type	Description	Amount	Insp Date	% Comp	Date Comp	Comments

VISIT / CHANGE HISTORY

Date	Id	Type	Is	Cd	Purpost/Result

LAND LINE VALUATION SECTION

B	Use Code	Description	Zone	LA	Land Units		Unit Price	Size Adj	AC Disc	Site Index	Cond.	Nbhd.	Nbhd. Adj	Notes	Location Adjustmen		Adj Unit P	Land Value

Total Card Land Units | Parcel Total Land Area | Total Land Value

Property Location 162 COTTONWOOD LANE | Map ID 252/ 026/ / / | Bldg Name | State Use 1010
Vision ID 18630 | Account # 163496 | Bldg # 1 | Sec # 1 of 1 | Card # 2 of 2 | Print Date 2/2/2024 5:31:55 PM

CONSTRUCTION DETAIL

Element	Cd	Description
Style	01	Ranch
Model	01	Residential
Grade:	C+	Average Plus
Stories	1	1 Story
Exterior Wall 1	25	Vinyl Siding
Exterior Wall 2	13	T111 Siding
Roof Structure	03	Gable/Hip
Roof Cover	03	Asph/F Gls/Cmp
Interior Wall 1	03	Plastered
Interior Wall 2		
Interior Floor 1	14	Carpet
Interior Floor 2		
Heat Fuel	03	Gas
Heat Type	05	Hot Water
AC Type	03	Central
Bedrooms	03	3 Bedrooms
Full Baths	2	
Half Baths	1	
Extra Fixtures		
Total Rooms	7	
Bath Style		
Kitchen Style		
Occupancy		
Usrfld 105		
Accessory Apt		
Foundation Alt	01	Poured Conc.
Rms Prts		
Bath Split	21	2 Full-1 Half

CONSTRUCTION DETAIL (CONTINUED)

Element	Cd	Description

CONDO DATA

Parcel Id		C		Owne	0.0
		B		S	

Adjust Type	Code	Description	Factor%
Condo Flr			
Condo Unit			

COST / MARKET VALUATION

Building Value New	
Year Built	
Effective Year Built	
Depreciation Code	
Remodel Rating	
Year Remodeled	
Depreciation %	
Functional Obsol	
External Obsol	
Trend Factor	
Condition	
Condition %	
Percent Good	
RCNLD	
Dep % Ovr	
Dep Ovr Comment	
Misc Imp Ovr	
Misc Imp Ovr Comment	
Cost to Cure Ovr	
Cost to Cure Ovr Comment	

OB - OUTBUILDING & YARD ITEMS(L) / XF - BUILDING EXTRA FEATURES(B)

Code	Description	L/B	Units	Unit Price	Yr Blt	Cond. Cd	% Gd	Grade	Grade Adj.	Appr. Value
FPIT	Fire Pit	L	1	3010.00	2017		98	C	1.00	2,900
SHED	Shed	L	80	18.00	2017		96		0.00	1,400
WDC	Wood Deck w/	L	48	18.00	2017		96		0.00	2,400
SHED	Shed	L	25	18.00	2017		96		0.00	400

BUILDING SUB-AREA SUMMARY SECTION

Code	Description	Living Area	Floor Area	Eff Area	Unit Cost	Undeprec Value
Ttl Gross Liv / Lease Area						