Property Location 37 MARSTON AVENUE | Map ID 288/ 130/ / / | Bldg Name | State Use 1010
Vision ID 21879 | Account # 192277 | Bldg # 1 | Sec # 1 of 1 | Card # 1 of 1 | Print Date 2/2/2024 11:40:35 PM

CURRENT OWNER

MEE, DILLON L & BRITTANY A

37 MARSTON AVENUE

HYANNIS MA 02601

TOPO		UTILITIES		STRT / ROAD		LOCATION	
1	Level	2	Public Water	1	Paved		
		4	Gas				
		6	Septic				

SUPPLEMENTAL DATA

Alt Prcl ID		Plan Ref.	111/93
Split Zonin		Land Ct#	
BID Parcel		#SR	
ResExpt Q	YES:	Life Estate	
#DL 1	LOT 20-B	PP STATU	
#DL 2			
GIS ID	F_983590_2695465	Assoc Pid#	

CURRENT ASSESSMENT

Description	Code	Assessed	Assessed
RESIDNTL	1010	198,900	198,900
RES LAND	1010	171,700	171,700
Total		370,600	370,600

801

FY2024
BARNSTABLE, MA

VISION

RECORD OF OWNERSHIP

	BK-VOL/PAGE		SALE DATE	Q/U	V/I	SALE PRIC	VC
CAPE COD KEYES LLC	35843	309	06-15-2023	Q	I	550,000	00
MEE, DILLON L & BRITTANY A	30337	0202	03-07-2017	Q	I	260,000	00
SMITH, SCOTT A & NANCY W	15180	0114	05-21-2002	Q	I	221,100	00
WELCH, LAURA ANNE	10858	0102	07-18-1997	Q	I	94,000	00
KELLY, WILLIAM F III & LORRAINE F & M	5906	0100	08-28-1987	Q	I	124,500	00

PREVIOUS ASSESSMENTS (HISTORY)

Year	Code	Assessed	Year	Code	Assessed V	Year	Code	Assessed
2023	1010	175,300	2022	1010	145,700	2021	1010	122,300
	1010	169,700		1010	120,600		1010	120,600
							1010	2,200
	Total	345,000		Total	266,300		Total	245,100

EXEMPTIONS

Year	Code	Description	Amount
2020	5C	RESIDENTIAL EXEMPTION	0.00
		Total	0.00

OTHER ASSESSMENTS

Code	Description	Number	Amount	Comm Int

This signature acknowledges a visit by a Data Collector or Assessor

ASSESSING NEIGHBORHOOD

Nbhd	Nbhd Name	B	Tracing	Batch
0106				HYAN

NOTES

APPRAISED VALUE SUMMARY

Appraised Bldg. Value (Card)	186,200
Appraised Xf (B) Value (Bldg)	10,500
Appraised Ob (B) Value (Bldg)	2,200
Appraised Land Value (Bldg)	171,700
Special Land Value	0
Total Appraised Parcel Value	370,600
Valuation Method	C
Total Appraised Parcel Value	370,600

BUILDING PERMIT RECORD

Permit Id	Issue Date	Type	Description	Amount	Insp Date	% Comp	Date Comp	Comments
200800800	02-27-2008	EX	Expired	5,000		0		EXPIRED PMT -BATH
B32800	04-01-1989	WD	Wood Deck	1,000	01-15-1990	100	12-31-1990	HP DECK

VISIT / CHANGE HISTORY

Date	Id	Type	Is	Cd	Purpost/Result
05-26-2020	WD			FR	Field Review
04-24-2020	PK	03		16	In Office Review
02-24-2020	CK	22		22	Change of Address
10-04-2017	SR	02		03	Cycl Insp Comp
09-18-2017	MS	03		16	In Office Review
07-23-2015	LH	03		16	In Office Review
09-18-2008	JG	03		09	Permit Entered

LAND LINE VALUATION SECTION

B	Use Code	Description	Zone	LA	Land Units		Unit Price	Size Adj	AC Disc	Site Index	Cond.	Nbhd.	Nbhd. Adj	Notes	Location Adjustmen	Adj Unit P	Land Value
1	1010	Single Fam M-0	RF-1	4	0.260	AC	176,344.00	3.25636	1.0000	5	1.00	0106	1.150		1.0000	660,373.0	171,700

Total Card Land Units 0.26 AC | Parcel Total Land Area 0.26 | Total Land Value 171,700

Property Location 37 MARSTON AVENUE | Map ID 288/ 130/ / / | Bldg Name | State Use 1010
Vision ID 21879 | Account # 192277 | Bldg # 1 | Sec # 1 of 1 | Card # 1 of 1 | Print Date 2/2/2024 11:40:36 PM

CONSTRUCTION DETAIL

Element	Cd	Description
Style	04	Cape Cod
Model	01	Residential
Grade:	C-	Average Minus
Stories	1.15	1 Story w/FAT
Exterior Wall 1	14	Wood Shingle
Exterior Wall 2		
Roof Structure	03	Gable/Hip
Roof Cover	03	Asph/F Gls/Cmp
Interior Wall 1	05	Drywall
Interior Wall 2		
Interior Floor 1	12	Hardwood
Interior Floor 2		
Heat Fuel	03	Gas
Heat Type	05	Hot Water
AC Type	01	None
Bedrooms	03	3 Bedrooms
Full Baths	1	
Half Baths	0	
Extra Fixtures		
Total Rooms	5	
Bath Style		
Kitchen Style		
Occupancy		
Usrfld 105		
Accessory Apt		
Foundation Alt	09	Blk/Pour Ftgs
Rms Prts		
Bath Split	10	1 Full-0 Half

CONSTRUCTION DETAIL (CONTINUED)

Element	Cd	Description

CONDO DATA

Parcel Id		C		Owne	0.0
		B		S	

Adjust Type	Code	Description	Factor%
Condo Flr			
Condo Unit			

COST / MARKET VALUATION

Building Value New	251,611
Year Built	1959
Effective Year Built	1985
Depreciation Code	A
Remodel Rating	
Year Remodeled	
Depreciation %	26
Functional Obsol	0
External Obsol	0
Trend Factor	1
Condition	
Condition %	
Percent Good	74
RCNLD	186,200
Dep % Ovr	
Dep Ovr Comment	
Misc Imp Ovr	
Misc Imp Ovr Comment	
Cost to Cure Ovr	
Cost to Cure Ovr Comment	

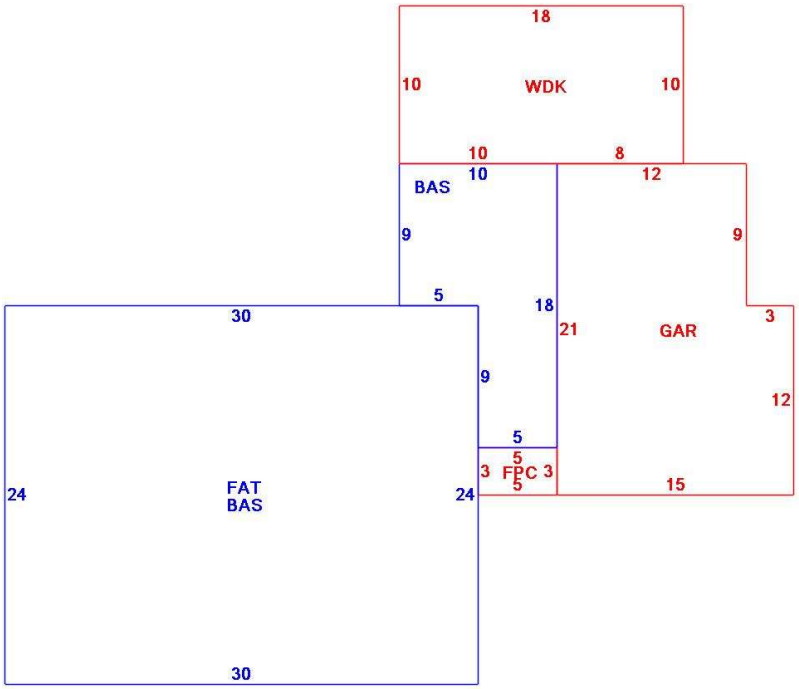

OB - OUTBUILDING & YARD ITEMS(L) / XF - BUILDING EXTRA FEATURES(B)

Code	Description	L/B	Units	Unit Price	Yr Blt	Cond. Cd	% Gd	Grade	Grade Adj.	Appr. Value
WDC	Wood Decking	L	180	20.00	1993		48		0.00	2,200
FOPC	Open Prch-roo	B	15	55.00	1987		74		0.00	900
GAR	Attached Gara	B	288	40.00	1987		74		0.00	9,600

BUILDING SUB-AREA SUMMARY SECTION

Code	Description	Living Area	Floor Area	Eff Area	Unit Cost	Undeprec Value
BAS	First Floor	855	855	855	261.28	223,393
FAT	Attic, Finished	108	720	108	39.19	28,218
FPC	Open Porch Conc. Floor	0	15	0	0.00	0
GAR	Attached Garage	0	288	0	0.00	0
WDK	Wood Deck	0	180	0	0.00	0
	Ttl Gross Liv / Lease Area	963	2,058	963		251,611