Property Location 294 SCUDDER AVENUE | Map ID 288/ 225/ / / | Bldg Name | State Use 1010
Vision ID 22002 | Account # 320245 | Bldg # 1 | Sec # 1 of 1 | Card # 1 of 2 | Print Date 2/2/2024 11:54:41 PM

CURRENT OWNER

BAKEWELL, JENIFER J

PO BOX 657

HYANNIS PORT MA 02647

TOPO / UTILITIES / STRT / ROAD / LOCATION

TOPO		UTILITIES		STRT / ROAD		LOCATION	
1	Level	2	Public Water	1	Paved	9	Rear Location
		4	Gas			1	Marginal View
		6	Septic				

SUPPLEMENTAL DATA

Alt Prcl ID		Plan Ref.	
Split Zonin		Land Ct#	36483-D
BID Parcel		#SR	
ResExpt Q	YES:	Life Estate	
#DL 1	LOT 8	PP STATU	
#DL 2			
GIS ID	F_982980_2696381	Assoc Pid#	

CURRENT ASSESSMENT

Description	Code	Assessed	Assessed
RESIDNTL	1010	678,900	678,900
RES LAND	1010	300,300	300,300
	Total	979,200	979,200

801

FY2024
BARNSTABLE, MA

VISION

RECORD OF OWNERSHIP

	BK-VOL/PAGE		SALE DATE	Q/U	V/I	SALE PRIC	VC
BAKEWELL, JENIFER J	C186312	0	06-27-2008	Q	I	555,000	00
KNOWLTON, JOAN C	C107700	0	08-15-1986	Q	I	195,000	U
NICKULAS, LARRY	C97479	0	07-15-1984	U	V	1	R

PREVIOUS ASSESSMENTS (HISTORY)

Year	Code	Assessed	Year	Code	Assessed V	Year	Code	Assessed
2023	1010	604,700	2022	1010	511,300	2021	1010	428,500
	1010	297,200		1010	190,500		1010	202,400
							1010	16,000
	Total	901,900		Total	701,800		Total	646,900

EXEMPTIONS

Year	Code	Description	Amount
2011	5C	RESIDENTIAL EXEMPTION	0.00
		Total	0.00

OTHER ASSESSMENTS

Code	Description	Number	Amount	Comm Int

This signature acknowledges a visit by a Data Collector or Assessor

APPRAISED VALUE SUMMARY

Appraised Bldg. Value (Card)	586,600
Appraised Xf (B) Value (Bldg)	76,300
Appraised Ob (B) Value (Bldg)	16,000
Appraised Land Value (Bldg)	300,300
Special Land Value	0
Total Appraised Parcel Value	979,200
Valuation Method	C
Total Appraised Parcel Value	979,200

ASSESSING NEIGHBORHOOD

Nbhd	Nbhd Name	B	Tracing	Batch
0108				HYAN

NOTES

BUILDING PERMIT RECORD

Permit Id	Issue Date	Type	Description	Amount	Insp Date	% Comp	Date Comp	Comments
20-1676	07-02-2020	835	Sid/Wind/Roof/	7,508		100		INSTALL (1) REPLACEMENT
201507498	11-04-2015	NW	New Windows	23,644	06-30-2016	100	06-30-2016	REPLACEMENT WINDOWS
201204523	08-14-2012	AD	Addition	111,000	06-11-2014	100	06-30-2014	2ND FLR ADD'N OVR GAR-M
201103407	07-01-2011	WD	Wood Deck	1,200	10-21-2011	100	06-30-2012	ENXTEND WDK UNDER CON
201102584	05-23-2011	WD	Wood Deck	2,400	10-21-2011	100	06-30-2012	48SF WDK
201101548	04-05-2011	WD	Wood Deck	30,000	10-21-2011	100	06-30-2012	10X16 DECK-FM SLIDERS T
201001440	04-05-2010	IN	Insulation	2,385	06-30-2010	100	06-30-2010	INSULATE

VISIT / CHANGE HISTORY

Date	Id	Type	Is	Cd	Purpost/Result
05-26-2020	WD			FR	Field Review
03-26-2015	JR	03		03	Cycl Insp Comp
01-22-2015	SR	02		14	Cyclical Inspection
08-19-2014	JR	03		16	In Office Review
06-13-2014	MW	02		02	Bldg Permit Completed
05-28-2014	MW	02		13	CALL BACK
06-28-2013	RB	03		13	CALL BACK

LAND LINE VALUATION SECTION

B	Use Code	Description	Zone	LA	Land Units		Unit Price	Size Adj	AC Disc	Site Index	Cond.	Nbhd.	Nbhd. Adj	Notes	Location Adjustmen	Adj Unit P	Land Value
1	1010	Single Fam M-0	RB	4	1.000	AC	176,344.00	1.00000	1.0000	5	1.00	0108	1.700	SIMMONS POND	1.0000	299,784.8	299,800
1	1010	Single Fam M-0	RB	4	0.010	AC	14,250.00	1.00000	1.0000	0	1.00	0108	1.700		1.0000	24,225	200
1	1010	Single Fam M-0	RB	4	0.110	AC	2,375.00	1.00000	1.0000	0	1.00	WTLD	1.000	WETLAND	1.0000	2,375	300

Total Card Land Units 1.12 AC | Parcel Total Land Area 1.12 | Total Land Value 300,300

Property Location 294 SCUDDER AVENUE | Map ID 288/ 225/ / / | Bldg Name | State Use 1010
Vision ID 22002 | Account # 320245 | Bldg # 1 | Sec # 1 of 1 | Card # 1 of 2 | Print Date 2/2/2024 11:54:41 PM

CONSTRUCTION DETAIL

Element	Cd	Description
Style	04	Cape Cod
Model	01	Residential
Grade:	B	Custom
Stories	1.75	1 3/4 Stories
Exterior Wall 1	25	Vinyl Siding
Exterior Wall 2	14	Wood Shingle
Roof Structure	03	Gable/Hip
Roof Cover	03	Asph/F Gls/Cmp
Interior Wall 1	05	Drywall
Interior Wall 2		
Interior Floor 1	14	Carpet
Interior Floor 2	12	Hardwood
Heat Fuel	03	Gas
Heat Type	05	Hot Water
AC Type	03	Central
Bedrooms	04	4 Bedrooms
Full Baths	3	
Half Baths	0	
Extra Fixtures		
Total Rooms	7	
Bath Style		
Kitchen Style		
Occupancy		
Usrfld 105		
Accessory Apt		
Foundation Alt	01	Poured Conc.
Rms Prts		
Bath Split	30	3 Full-0 Half

CONSTRUCTION DETAIL (CONTINUED)

Element	Cd	Description

CONDO DATA

Parcel Id		C		Owne	0.0
		B		S	

Adjust Type	Code	Description	Factor%
Condo Flr			
Condo Unit			

COST / MARKET VALUATION

Building Value New	698,354
Year Built	1985
Effective Year Built	1998
Depreciation Code	A
Remodel Rating	
Year Remodeled	
Depreciation %	16
Functional Obsol	0
External Obsol	0
Trend Factor	1
Condition	
Condition %	
Percent Good	84
RCNLD	586,600
Dep % Ovr	
Dep Ovr Comment	
Misc Imp Ovr	
Misc Imp Ovr Comment	
Cost to Cure Ovr	
Cost to Cure Ovr Comment	

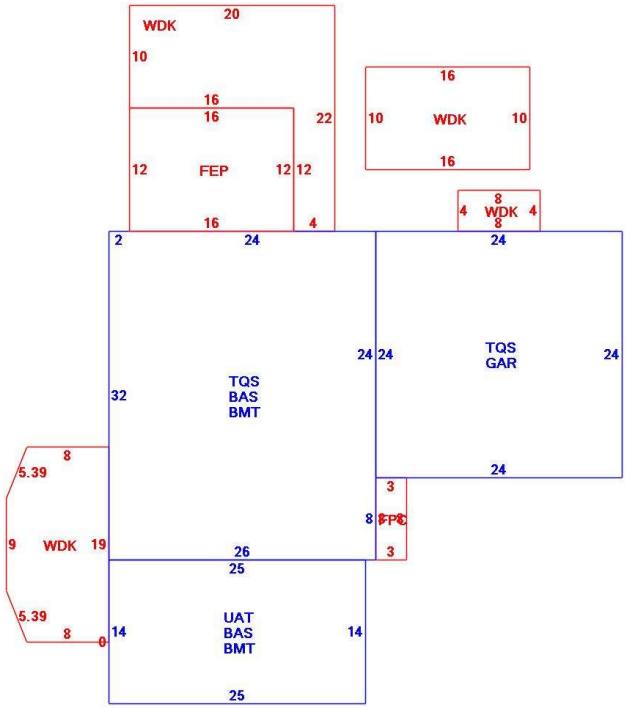

OB - OUTBUILDING & YARD ITEMS(L) / XF - BUILDING EXTRA FEATURES(B)

Code	Description	L/B	Units	Unit Price	Yr Blt	Cond. Cd	% Gd	Grade	Grade Adj.	Appr. Value
FPL2	Fireplace 1.5 s	B	1	6000.00	2000		84		0.00	5,000
FPO	Ext FP Openin	B	1	2000.00	2000		84		0.00	1,700
BFA1	Bsmt Fin-Goo	B	576	32.56	2000		84		0.00	15,800
WDC	Wood Decking	L	212	20.00	2005		72		0.00	3,500
FEP	Enclosed porc	B	192	70.00	2000		84		0.00	10,300
GAR	Attached Gara	B	576	40.00	2000		84		0.00	17,200
BMT	Basement-Unfi	B	1,182	26.01	2000		84		0.00	24,900
WDC	Deck comp w	L	248	28.00	2011		84		0.00	6,300
WDC	Deck composit	L	160	24.00	2011		84		0.00	4,300
WDC	Wood Decking	L	32	20.00	2012		86		0.00	1,900

BUILDING SUB-AREA SUMMARY SECTION

Code	Description	Living Area	Floor Area	Eff Area	Unit Cost	Undeprec Value
BAS	First Floor	1,182	1,182	1,182	327.56	387,174
BMT	Basement Area	0	1,182	0	0.00	0
FEP	Enclosed Porch	0	192	0	0.00	0
FPC	Open Porch Conc. Floor	0	24	0	0.00	0
GAR	Attached Garage	0	576	0	0.00	0
TQS	Three Quarter Story	915	1,408	915	212.87	299,716
UAT	Attic, Unfinished	0	350	35	32.76	11,465
WDK	Wood Deck	0	620	0	0.00	0
	Ttl Gross Liv / Lease Area	2,097	5,534	2,132		698,355

Property Location 294 SCUDDER AVENUE | Map ID 288/ 225/ / / | Bldg Name | State Use 1010
Vision ID 22002 | Account # 320245 | Bldg # 1 | Sec # 1 of 1 | Card # 2 of 2 | Print Date 2/2/2024 11:54:41 PM

CURRENT OWNER

BAKEWELL, JENIFER J

PO BOX 657

HYANNIS PORT MA 02647

TOPO / UTILITIES / STRT / ROAD / LOCATION

TOPO		UTILITIES		STRT / ROAD		LOCATION	
1	Level	2	Public Water	1	Paved	9	Rear Location
		4	Gas			1	Marginal View
		6	Septic				

SUPPLEMENTAL DATA

Alt Prcl ID		Plan Ref.	
Split Zonin		Land Ct#	36483-D
BID Parcel		#SR	
ResExpt Q	YES:	Life Estate	
#DL 1	LOT 8	PP STATU	
#DL 2			
GIS ID	F_982980_2696381	Assoc Pid#	

CURRENT ASSESSMENT

Description	Code	Assessed	Assessed
RESIDNTL	1010	678,900	678,900
RES LAND	1010	300,300	300,300
	Total	979,200	979,200

801

FY2024
BARNSTABLE, MA

VISION

RECORD OF OWNERSHIP

BK-VOL/PAGE		SALE DATE	Q/U	V/I	SALE PRIC	VC

PREVIOUS ASSESSMENTS (HISTORY)

Year	Code	Assessed	Year	Code	Assessed V	Year	Code	Assessed
2023	1010	604,700	2022	1010	511,300	2021	1010	428,500
	1010	297,200		1010	190,500		1010	202,400
							1010	16,000
	Total	901,900		Total	701,800		Total	646,900

EXEMPTIONS

Year	Code	Description	Amount
		Total	

OTHER ASSESSMENTS

Code	Description	Number	Amount	Comm Int

This signature acknowledges a visit by a Data Collector or Assessor

ASSESSING NEIGHBORHOOD

Nbhd	Nbhd Name	B	Tracing	Batch
0108				HYAN

NOTES

APPRAISED VALUE SUMMARY

Appraised Bldg. Value (Card)	586,600
Appraised Xf (B) Value (Bldg)	76,300
Appraised Ob (B) Value (Bldg)	16,000
Appraised Land Value (Bldg)	300,300
Special Land Value	0
Total Appraised Parcel Value	979,200
Valuation Method	C
Total Appraised Parcel Value	979,200

BUILDING PERMIT RECORD

Permit Id	Issue Date	Type	Description	Amount	Insp Date	% Comp	Date Comp	Comments

VISIT / CHANGE HISTORY

Date	Id	Type	Is	Cd	Purpost/Result

LAND LINE VALUATION SECTION

B	Use Code	Description	Zone	LA	Land Units		Unit Price	Size Adj	AC Disc	Site Index	Cond.	Nbhd.	Nbhd. Adj	Notes	Location Adjustmen		Adj Unit P	Land Value

Total Card Land Units | Parcel Total Land Area | Total Land Value

Property Location 294 SCUDDER AVENUE | Map ID 288/ 225/ / / | Bldg Name | State Use 1010
Vision ID 22002 | Account # 320245 | Bldg # 1 | Sec # 1 of 1 | Card # 2 of 2 | Print Date 2/2/2024 11:54:42 PM

CONSTRUCTION DETAIL

Element	Cd	Description
Style	04	Cape Cod
Model	01	Residential
Grade:	B	Custom
Stories	1.75	1 3/4 Stories
Exterior Wall 1	25	Vinyl Siding
Exterior Wall 2	14	Wood Shingle
Roof Structure	03	Gable/Hip
Roof Cover	03	Asph/F Gls/Cmp
Interior Wall 1	05	Drywall
Interior Wall 2		
Interior Floor 1	14	Carpet
Interior Floor 2	12	Hardwood
Heat Fuel	03	Gas
Heat Type	05	Hot Water
AC Type	03	Central
Bedrooms	04	4 Bedrooms
Full Baths	3	
Half Baths	0	
Extra Fixtures		
Total Rooms	7	
Bath Style		
Kitchen Style		
Occupancy		
Usrfld 105		
Accessory Apt		
Foundation Alt	01	Poured Conc.
Rms Prts		
Bath Split	30	3 Full-0 Half

CONSTRUCTION DETAIL (CONTINUED)

Element	Cd	Description

CONDO DATA

Parcel Id		C		Owne	0.0
		B		S	

Adjust Type	Code	Description	Factor%
Condo Flr			
Condo Unit			

COST / MARKET VALUATION

Building Value New	
Year Built	
Effective Year Built	
Depreciation Code	
Remodel Rating	
Year Remodeled	
Depreciation %	
Functional Obsol	
External Obsol	
Trend Factor	
Condition	
Condition %	
Percent Good	
RCNLD	
Dep % Ovr	
Dep Ovr Comment	
Misc Imp Ovr	
Misc Imp Ovr Comment	
Cost to Cure Ovr	
Cost to Cure Ovr Comment	

OB - OUTBUILDING & YARD ITEMS(L) / XF - BUILDING EXTRA FEATURES(B)

Code	Description	L/B	Units	Unit Price	Yr Blt	Cond. Cd	% Gd	Grade	Grade Adj.	Appr. Value
FOPC	Open Prch-roo	B	24	55.00	2000		84		0.00	1,400

BUILDING SUB-AREA SUMMARY SECTION

Code	Description	Living Area	Floor Area	Eff Area	Unit Cost	Undeprec Value
Ttl Gross Liv / Lease Area						