Property Location 95 STETSON STREET | Map ID 306/ 060/ / / | Bldg Name | State Use 1010
Vision ID 24217 | Account # 213842 | Bldg # 1 | Sec # 1 of 1 | Card # 1 of 1 | Print Date 2/5/2024 2:52:04 PM

## CURRENT OWNER

MASTERSON, JESSE & HEATHER

25 WHITE LAWN AVENUE

MILTON MA 02186

| TOPO | | UTILITIES | | STRT / ROAD | | LOCATION | |
|---|---|---|---|---|---|---|---|
| 1 | Level | 2 | Public Water | 1 | Paved | | |
| | | 4 | Gas | | | | |
| | | 6 | Septic | | | | |

## SUPPLEMENTAL DATA

| | | | |
|---|---|---|---|
| Alt Prcl ID | | Plan Ref. | 82/39 |
| Split Zonin | | Land Ct# | |
| BID Parcel | | #SR | |
| ResExpt Q | | Life Estate | |
| #DL 1 | LOT 5 & 13 | PP STATU | |
| #DL 2 | | | |
| GIS ID | F_985791_2696274 | Assoc Pid# | |

## CURRENT ASSESSMENT

| Description | Code | Assessed | Assessed |
|---|---|---|---|
| RESIDNTL | 1010 | 464,800 | 464,800 |
| RES LAND | 1010 | 215,900 | 215,900 |
| Total | | 680,700 | 680,700 |

801

FY2024
BARNSTABLE, MA

**VISION**

## RECORD OF OWNERSHIP

| | BK-VOL/PAGE | | SALE DATE | Q/U | V/I | SALE PRIC | VC |
|---|---|---|---|---|---|---|---|
| MASTERSON, JESSE & HEATHER | 30555 | 0304 | 06-14-2017 | Q | I | 452,500 | 00 |
| KEEFE, STEPHEN J | 25282 | 0288 | 02-25-2011 | Q | I | 307,500 | 00 |
| HEBENSTREIT, WM & TAYWICK, MARTIN | 24493 | 0094 | 04-16-2010 | U | I | 1 | 1F |
| NOWAK, GREGORY | 24493 | 0089 | 04-16-2010 | U | I | 200,000 | 1 |
| LOMBARDI, KERRY F | 8680 | 0296 | 07-15-1993 | U | I | 94,500 | L |

## PREVIOUS ASSESSMENTS (HISTORY)

| Year | Code | Assessed | Year | Code | Assessed V | Year | Code | Assessed |
|---|---|---|---|---|---|---|---|---|
| 2023 | 1010 | 411,800 | 2022 | 1010 | 311,700 | 2021 | 1010 | 254,600 |
| | 1010 | 196,300 | | 1010 | 135,000 | | 1010 | 137,100 |
| | | | | | | | 1010 | 2,900 |
| | Total | 608,100 | | Total | 446,700 | | Total | 394,600 |

## EXEMPTIONS

| Year | Code | Description | Amount |
|---|---|---|---|
| | | Total | 0.00 |

## OTHER ASSESSMENTS

| Code | Description | Number | Amount | Comm Int |
|---|---|---|---|---|
| | | | | |

This signature acknowledges a visit by a Data Collector or Assessor

## ASSESSING NEIGHBORHOOD

| Nbhd | Nbhd Name | B | Tracing | Batch |
|---|---|---|---|---|
| 0107 | | | | HYAN |

## NOTES

## APPRAISED VALUE SUMMARY

| | |
|---|---|
| Appraised Bldg. Value (Card) | 419,200 |
| Appraised Xf (B) Value (Bldg) | 25,400 |
| Appraised Ob (B) Value (Bldg) | 20,200 |
| Appraised Land Value (Bldg) | 215,900 |
| Special Land Value | 0 |
| Total Appraised Parcel Value | 680,700 |
| Valuation Method | C |
| Total Appraised Parcel Value | 680,700 |

## BUILDING PERMIT RECORD

| Permit Id | Issue Date | Type | Description | Amount | Insp Date | % Comp | Date Comp | Comments |
|---|---|---|---|---|---|---|---|---|
| SM-21-93 | 07-28-2021 | 834 | Sheet Metal | 1,000 | 04-20-2022 | 100 | 06-30-2022 | Installation of new HVAC syste |
| BLDR-21-29 | 03-12-2021 | 804 | Addn Alt-Res | 50,000 | 06-30-2021 | 100 | 06-30-2021 | Adding bedroom and 1 bathro |
| BLDR-21-29 | 03-01-2021 | 809 | Deck | 5,000 | 04-20-2022 | 100 | 06-30-2022 | 2 decks |
| 201203464 | 06-15-2012 | RW | Repair Work | 35,000 | 05-08-2013 | 100 | 06-30-2013 | REPLC WTR DAM INSULATI |
| 201202429 | 04-27-2012 | DE | Demolish | 2,500 | 05-08-2013 | 100 | 06-30-2013 | INTER DEMO OF WTR DAMA |
| 200804459 | 08-20-2008 | NR | New Roof | 1,000 | 06-30-2009 | 100 | 06-30-2009 | REROOF STRIPPING OLD-R |
| 200802032 | 04-16-2008 | NW | New Windows | 1,800 | 06-30-2008 | 100 | 06-30-2008 | NW WINDS |

## VISIT / CHANGE HISTORY

| Date | Id | Type | Is | Cd | Purpost/Result |
|---|---|---|---|---|---|
| 04-20-2022 | CK | 02 | | 02 | Bldg Permit Completed |
| 06-08-2021 | SR | 01 | | 13 | CALL BACK |
| 05-08-2020 | WD | | | FR | Field Review |
| 05-09-2018 | RB | 03 | | 16 | In Office Review |
| 09-21-2017 | SR | 02 | | 03 | Cycl Insp Comp |
| 12-10-2013 | JR | 03 | | 20 | Sale Review |
| 05-24-2013 | RB | 03 | | 02 | Bldg Permit Completed |

## LAND LINE VALUATION SECTION

| B | Use Code | Description | Zone | LA | Land Units | | Unit Price | Size Adj | AC Disc | Site Index | Cond. | Nbhd. | Nbhd. Adj | Notes | Location Adjustmen | Adj Unit P | Land Value |
|---|---|---|---|---|---|---|---|---|---|---|---|---|---|---|---|---|---|
| 1 | 1010 | Single Fam M-0 | RB | 4 | 0.410 | AC | 176,344.00 | 2.13291 | 1.0000 | 5 | 1.00 | 0107 | 1.400 | | 1.0000 | 526,580.8 | 215,900 |

Total Card Land Units 0.41 AC | Parcel Total Land Area 0.41 | Total Land Value 215,900

Property Location 95 STETSON STREET | Map ID 306/ 060/ / / | Bldg Name | State Use 1010
Vision ID 24217 | Account # 213842 | Bldg # 1 | Sec # 1 of 1 | Card # 1 of 1 | Print Date 2/5/2024 2:52:04 PM

## CONSTRUCTION DETAIL

| Element | Cd | Description |
|---|---|---|
| Style | 04 | Cape Cod |
| Model | 01 | Residential |
| Grade: | C | Average |
| Stories | 1.75 | 1 3/4 Stories |
| Exterior Wall 1 | 14 | Wood Shingle |
| Exterior Wall 2 | | |
| Roof Structure | 03 | Gable/Hip |
| Roof Cover | 03 | Asph/F Gls/Cmp |
| Interior Wall 1 | 05 | Drywall |
| Interior Wall 2 | | |
| Interior Floor 1 | 12 | Hardwood |
| Interior Floor 2 | | |
| Heat Fuel | 03 | Gas |
| Heat Type | 04 | Hot Air |
| AC Type | 03 | Central |
| Bedrooms | 05 | 5 Bedrooms |
| Full Baths | 3 | |
| Half Baths | 1 | |
| Extra Fixtures | | |
| Total Rooms | 9 | 9 Rooms |
| Bath Style | | |
| Kitchen Style | | |
| Occupancy | | |
| Usrfld 105 | | |
| Accessory Apt | | |
| Foundation Alt | 02 | Conc. Block |
| Rms Prts | | |
| Bath Split | 31 | 3 Full-1 Half |

## CONSTRUCTION DETAIL (CONTINUED)

| Element | Cd | Description |
|---|---|---|
| | | |

## CONDO DATA

| Parcel Id | | C | | Owne | 0.0 |
|---|---|---|---|---|---|
| | | B | | S | |

| Adjust Type | Code | Description | Factor% |
|---|---|---|---|
| Condo Flr | | | |
| Condo Unit | | | |

## COST / MARKET VALUATION

| | |
|---|---|
| Building Value New | 537,464 |
| Year Built | 1950 |
| Effective Year Built | 1991 |
| Depreciation Code | VG |
| Remodel Rating | |
| Year Remodeled | |
| Depreciation % | 22 |
| Functional Obsol | 0 |
| External Obsol | 0 |
| Trend Factor | 1 |
| Condition | |
| Condition % | |
| Percent Good | 78 |
| RCNLD | 419,200 |
| Dep % Ovr | |
| Dep Ovr Comment | |
| Misc Imp Ovr | |
| Misc Imp Ovr Comment | |
| Cost to Cure Ovr | |
| Cost to Cure Ovr Comment | |

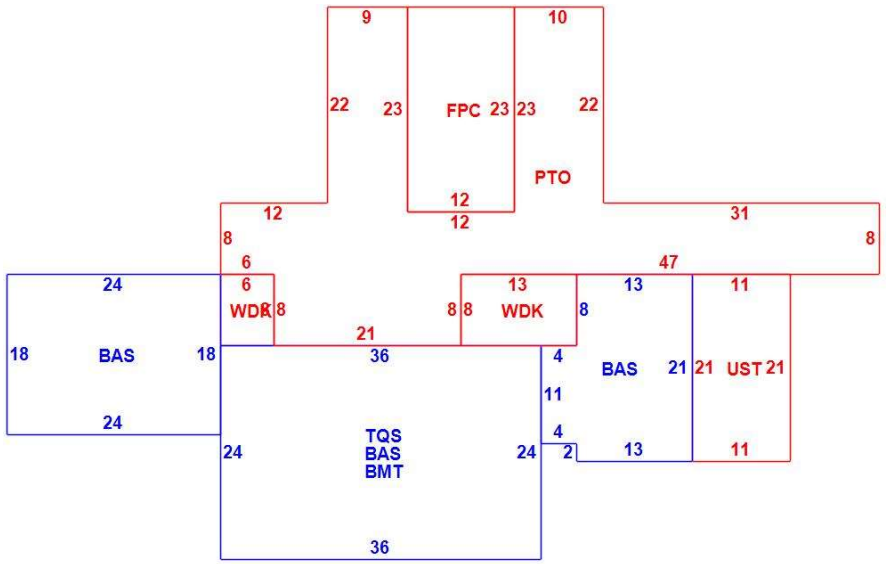

## OB - OUTBUILDING & YARD ITEMS(L) / XF - BUILDING EXTRA FEATURES(B)

| Code | Description | L/B | Units | Unit Price | Yr Blt | Cond. Cd | % Gd | Grade | Grade Adj. | Appr. Value |
|---|---|---|---|---|---|---|---|---|---|---|
| FPL2 | Fireplace 1.5 s | B | 1 | 6000.00 | 1993 | | 78 | | 0.00 | 4,700 |
| UST | Utility Storage- | B | 231 | 17.11 | 1993 | | 78 | | 0.00 | 2,000 |
| BMT | Basement-Unfi | B | 864 | 26.01 | 1993 | | 78 | | 0.00 | 18,700 |
| WDC | Wood Deck w/ | L | 152 | 18.00 | 2022 | | 100 | | 0.00 | 3,700 |
| PAT2 | Patio-Good | L | 1,166 | 9.94 | 2022 | | 100 | | 0.00 | 10,200 |
| FOPD | FOP-CONCR | L | 276 | 31.41 | 2022 | | 100 | C | 1.00 | 6,300 |

## BUILDING SUB-AREA SUMMARY SECTION

| Code | Description | Living Area | Floor Area | Eff Area | Unit Cost | Undeprec Value |
|---|---|---|---|---|---|---|
| BAS | First Floor | 1,613 | 1,613 | 1,613 | 247.11 | 398,588 |
| BMT | Basement Area | 0 | 864 | 0 | 0.00 | 0 |
| FPC | Open Porch Conc. Floor | 0 | 276 | 0 | 0.00 | 0 |
| PTO | Patio | 0 | 1,166 | 0 | 0.00 | 0 |
| TQS | Three Quarter Story | 562 | 864 | 562 | 160.74 | 138,876 |
| UST | Utility Enclosure | 0 | 231 | 0 | 0.00 | 0 |
| WDK | Wood Deck | 0 | 152 | 0 | 0.00 | 0 |
| | Ttl Gross Liv / Lease Area | 2,175 | 5,166 | 2,175 | | 537,464 |