Property Location 84 BREAKWATER SHORES DR | Map ID 306/ 166/ 002/ / | Bldg Name | State Use 1040
Vision ID 24378 | Account # 326944 | Bldg # 1 | Sec # 1 of 1 | Card # 1 of 1 | Print Date 2/5/2024 3:10:08 PM

CURRENT OWNER

BANTA, ANTHONY M & ELAINE E

84 BREAKWATER SHORES DR

HYANNIS MA 02601

TOPO	UTILITIES	STRT / ROAD	LOCATION
1 Level	1 All Public	1 Paved	1 Water View

SUPPLEMENTAL DATA

Alt Prcl ID		Plan Ref.	165/111
Split Zonin		Land Ct#	
BID Parcel		#SR	
ResExpt Q	YES:	Life Estate	
#DL 1	LOT 11	PP STATU	
#DL 2			
GIS ID	F_987727_2695059	Assoc Pid#	

CURRENT ASSESSMENT

Description	Code	Assessed	Assessed
RESIDNTL	1040	347,000	347,000
RES LAND	1040	447,300	447,300
Total		794,300	794,300

801

FY2024
BARNSTABLE, MA

VISION

RECORD OF OWNERSHIP

	BK-VOL/PAGE		SALE DATE	Q/U	V/I	SALE PRIC	VC
BANTA, ANTHONY M & ELAINE E	6944	0228	11-15-1989	U	I	1	A
THOMAS, MICHAEL & KATHERINE	5228	0267	08-15-1986	Q	I	137,000	U
EISENHAUER, FRANK R & PATRICIA	5024	0052	04-15-1986	Q	I	137,000	U
SNYDER, DONALD P	1671	0348	06-20-1972	U	V	0	

PREVIOUS ASSESSMENTS (HISTORY)

Year	Code	Assessed	Year	Code	Assessed V	Year	Code	Assessed
2023	1040	297,200	2022	1040	258,000	2021	1040	203,200
	1040	526,700		1040	296,300		1040	316,000
							1040	6,900
	Total	823,900		Total	554,300		Total	526,100

EXEMPTIONS

Year	Code	Description	Amount
2010	5C	RESIDENTIAL EXEMPTION	0.00
		Total	0.00

OTHER ASSESSMENTS

Code	Description	Number	Amount	Comm Int

This signature acknowledges a visit by a Data Collector or Assessor

ASSESSING NEIGHBORHOOD

Nbhd	Nbhd Name	B	Tracing	Batch
0111				HYAN

NOTES

APPRAISED VALUE SUMMARY

Appraised Bldg. Value (Card)	313,300
Appraised Xf (B) Value (Bldg)	26,300
Appraised Ob (B) Value (Bldg)	7,400
Appraised Land Value (Bldg)	447,300
Special Land Value	0
Total Appraised Parcel Value	794,300
Valuation Method	C
Total Appraised Parcel Value	794,300

BUILDING PERMIT RECORD

Permit Id	Issue Date	Type	Description	Amount	Insp Date	% Comp	Date Comp	Comments
201104518	08-23-2011	IN	Insulation	4,400	06-30-2012	100	06-30-2012	IN - CRAWL SP, EXT WALLS,

VISIT / CHANGE HISTORY

Date	Id	Type	Is	Cd	Purpost/Result
06-14-2022	BM	02		03	Cycl Insp Comp
05-11-2020	WD			FR	Field Review
02-12-2019	CL			16	In Office Review
06-27-2014	NF	03		16	In Office Review
06-23-2014	SR	02		03	Cycl Insp Comp
05-17-2012	TP	03		16	In Office Review
03-29-2002	PT	01		00	Meas/Listed-Interior Acces

LAND LINE VALUATION SECTION

B	Use Code	Description	Zone	LA	Land Units		Unit Price	Size Adj	AC Disc	Site Index	Cond.	Nbhd.	Nbhd. Adj	Notes	Location Adjustmen	Adj Unit P	Land Value
1	1040	Two Family	RB	4	0.230	AC	176,344.00	3.61599	1.0000	5	1.00	0111	3.050		1.0000	1,944,862	447,300

Total Card Land Units 0.23 AC | Parcel Total Land Area 0.23 | Total Land Value 447,300

Property Location 84 BREAKWATER SHORES DR | Map ID 306/ 166/ 002/ / | Bldg Name | State Use 1040
Vision ID 24378 | Account # 326944 | Bldg # 1 | Sec # 1 of 1 | Card # 1 of 1 | Print Date 2/5/2024 3:10:09 PM

CONSTRUCTION DETAIL

Element	Cd	Description
Style	01	Ranch
Model	01	Residential
Grade:	C	Average
Stories	1	1 Story
Exterior Wall 1	11	Clapboard
Exterior Wall 2		
Roof Structure	03	Gable/Hip
Roof Cover	03	Asph/F Gls/Cmp
Interior Wall 1	05	Drywall
Interior Wall 2		
Interior Floor 1	20	Typical
Interior Floor 2		
Heat Fuel	03	Gas
Heat Type	04	Hot Air
AC Type	01	None
Bedrooms	02	2 Bedrooms
Full Baths	2	
Half Baths	0	
Extra Fixtures		
Total Rooms	8	8 Rooms
Bath Style		
Kitchen Style		
Occupancy		
Usrfld 105		
Accessory Apt		
Foundation Alt	01	Poured Conc.
Rms Prts		
Bath Split	20	2 Full-0 Half

CONSTRUCTION DETAIL (CONTINUED)

Element	Cd	Description

CONDO DATA

Parcel Id		C		Owne	0.0
		B		S	

Adjust Type	Code	Description	Factor%
Condo Flr			
Condo Unit			

COST / MARKET VALUATION

Building Value New	423,360
Year Built	1960
Effective Year Built	1986
Depreciation Code	A
Remodel Rating	
Year Remodeled	
Depreciation %	26
Functional Obsol	0
External Obsol	0
Trend Factor	1
Condition	
Condition %	
Percent Good	74
RCNLD	313,300
Dep % Ovr	
Dep Ovr Comment	
Misc Imp Ovr	
Misc Imp Ovr Comment	
Cost to Cure Ovr	
Cost to Cure Ovr Comment	

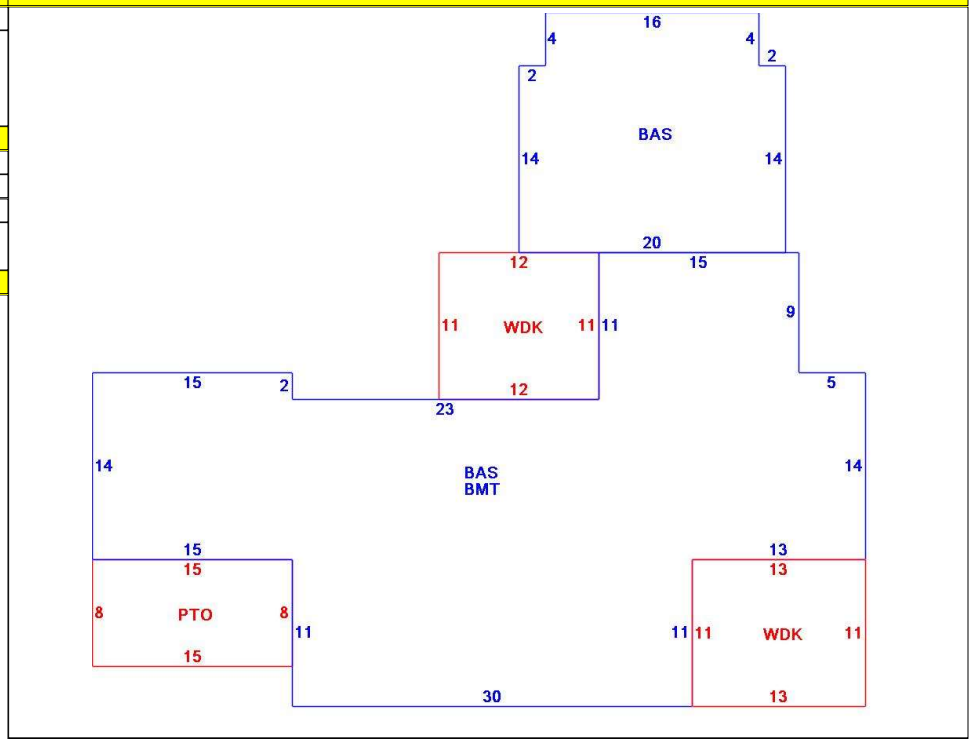

OB - OUTBUILDING & YARD ITEMS(L) / XF - BUILDING EXTRA FEATURES(B)

Code	Description	L/B	Units	Unit Price	Yr Blt	Cond. Cd	% Gd	Grade	Grade Adj.	Appr. Value
FPL1	Fireplace 1 sto	B	1	5000.00	1988		74		0.00	3,700
WDC	Wood Decking	L	143	20.00	1993		48		0.00	1,900
BMT	Basement-Unfi	B	1,231	26.01	1988		74		0.00	22,600
PATF	Flagstone Pav	L	120	30.00	1994		75		0.00	3,200
WDC	Wood Deck w/	L	132	18.00	1994		50		0.00	1,800
SHED	Shed	L	48	18.00	1996		54		0.00	500

BUILDING SUB-AREA SUMMARY SECTION

Code	Description	Living Area	Floor Area	Eff Area	Unit Cost	Undeprec Value
BAS	First Floor	1,575	1,575	1,575	268.80	423,360
BMT	Basement Area	0	1,231	0	0.00	0
PTO	Patio	0	120	0	0.00	0
WDK	Wood Deck	0	275	0	0.00	0
	Ttl Gross Liv / Lease Area	1,575	3,201	1,575		423,360