Property Location 43 POTTER AVENUE | Map ID 308/ 149/ / / | Bldg Name | State Use 1010
Vision ID 25009 | Account # 221183 | Bldg # 1 | Sec # 1 of 1 | Card # 1 of 1 | Print Date 2/5/2024 4:22:03 PM

CURRENT OWNER

AYLWARD, PHILLIP T & WENDY G

43 POTTER AVENUE

HYANNIS MA 02601

TOPO	UTILITIES	STRT / ROAD	LOCATION
1 Level	1 All Public	1 Paved	

SUPPLEMENTAL DATA

Alt Prcl ID		Plan Ref.	
Split Zonin		Land Ct#	9638-F
BID Parcel		#SR	
ResExpt Q	YES:	Life Estate	
#DL 1	LOT 14C, 15B & C & 16C	PP STATU	
#DL 2			
GIS ID	F_985912_2698639	Assoc Pid#	

CURRENT ASSESSMENT

Description	Code	Assessed	Assessed
RESIDNTL	1010	388,500	388,500
RES LAND	1010	151,300	151,300
Total		539,800	539,800

801

FY2024
BARNSTABLE, MA

VISION

RECORD OF OWNERSHIP

	BK-VOL/PAGE		SALE DATE	Q/U	V/I	SALE PRIC	VC
AYLWARD, PHILLIP T & WENDY G	C152537	0	03-31-1999	Q	I	165,000	00
HARVEY, MICHAEL L	C143480	0	02-03-1997	Q	I	140,000	00
MOREL, MARK W	C136514	0	02-28-1995	U	I	86,000	L
FEDERAL HOME LOAN MORTGAGE CO	C134409	0	07-14-1994	U	I	95,000	L
PATULAK, DAVID M & DICKERSON, KAR	C110893	0	05-22-1987	Q	I	175,000	U

PREVIOUS ASSESSMENTS (HISTORY)

Year	Code	Assessed	Year	Code	Assessed V	Year	Code	Assessed
2023	1010	333,900	2022	1010	276,100	2021	1010	243,200
	1010	137,500		1010	101,900		1010	101,900
							1010	8,900
	Total	471,400		Total	378,000		Total	354,000

EXEMPTIONS

Year	Code	Description	Amount
2012	5C	RESIDENTIAL EXEMPTION	0.00
		Total	0.00

OTHER ASSESSMENTS

Code	Description	Number	Amount	Comm Int

This signature acknowledges a visit by a Data Collector or Assessor

ASSESSING NEIGHBORHOOD

Nbhd	Nbhd Name	B	Tracing	Batch
0105				HYAN

NOTES

APPRAISED VALUE SUMMARY

Appraised Bldg. Value (Card)	337,100
Appraised Xf (B) Value (Bldg)	42,600
Appraised Ob (B) Value (Bldg)	8,800
Appraised Land Value (Bldg)	151,300
Special Land Value	0
Total Appraised Parcel Value	539,800
Valuation Method	C
Total Appraised Parcel Value	539,800

BUILDING PERMIT RECORD

Permit Id	Issue Date	Type	Description	Amount	Insp Date	% Comp	Date Comp	Comments

VISIT / CHANGE HISTORY

Date	Id	Type	Is	Cd	Purpost/Result
05-07-2020	WD			FR	Field Review
09-26-2017	SR	01		03	Cycl Insp Comp
04-30-2012	TR	03		16	In Office Review
03-07-2012	DR	22		22	Change of Address
03-22-2002	PT	01		00	Meas/Listed-Interior Acces
05-15-1988	ML	01		00	Meas/Listed-Interior Acces

LAND LINE VALUATION SECTION

B	Use Code	Description	Zone	LA	Land Units		Unit Price	Size Adj	AC Disc	Site Index	Cond.	Nbhd.	Nbhd. Adj	Notes	Location Adjustmen	Adj Unit P	Land Value
1	1010	Single Fam M-0	RB	4	0.320	AC	176,344.00	2.68059	1.0000	5	1.00	0105	1.000		1.0000	472,707.7	151,300

Total Card Land Units 0.32 AC | Parcel Total Land Area 0.32 | Total Land Value 151,300

Property Location 43 POTTER AVENUE | Map ID 308/ 149/ / / | Bldg Name | State Use 1010
Vision ID 25009 | Account # 221183 | Bldg # 1 | Sec # 1 of 1 | Card # 1 of 1 | Print Date 2/5/2024 4:22:03 PM

CONSTRUCTION DETAIL

Element	Cd	Description
Style	03	Colonial
Model	01	Residential
Grade:	C	Average
Stories	2.15	2 Stories w/FA
Exterior Wall 1	14	Wood Shingle
Exterior Wall 2		
Roof Structure	03	Gable/Hip
Roof Cover	03	Asph/F Gls/Cmp
Interior Wall 1	03	Plastered
Interior Wall 2		
Interior Floor 1	12	Hardwood
Interior Floor 2		
Heat Fuel	03	Gas
Heat Type	05	Hot Water
AC Type	01	None
Bedrooms	03	3 Bedrooms
Full Baths	2	
Half Baths	0	
Extra Fixtures		
Total Rooms	10	10 Rooms
Bath Style		
Kitchen Style		
Occupancy		
Usrfld 105		
Accessory Apt		
Foundation Alt	01	Poured Conc.
Rms Prts		
Bath Split	30	3 Full-0 Half

CONSTRUCTION DETAIL (CONTINUED)

Element	Cd	Description

CONDO DATA

Parcel Id		C		Owne	0.0
		B		S	

Adjust Type	Code	Description	Factor%
Condo Flr			
Condo Unit			

COST / MARKET VALUATION

Building Value New	488,535
Year Built	1930
Effective Year Built	1979
Depreciation Code	A
Remodel Rating	
Year Remodeled	
Depreciation %	31
Functional Obsol	0
External Obsol	0
Trend Factor	1
Condition	
Condition %	
Percent Good	69
RCNLD	337,100
Dep % Ovr	
Dep Ovr Comment	
Misc Imp Ovr	
Misc Imp Ovr Comment	
Cost to Cure Ovr	
Cost to Cure Ovr Comment	

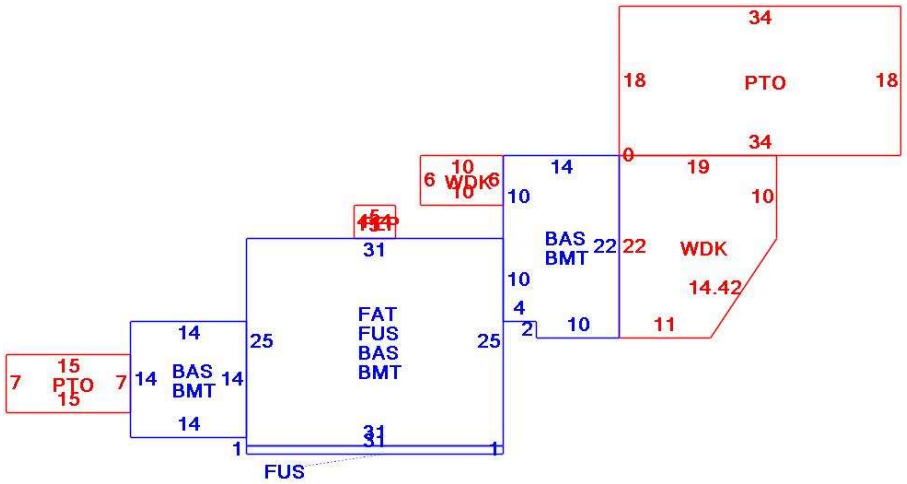

OB - OUTBUILDING & YARD ITEMS(L) / XF - BUILDING EXTRA FEATURES(B)

Code	Description	L/B	Units	Unit Price	Yr Blt	Cond. Cd	% Gd	Grade	Grade Adj.	Appr. Value
FPL3	Fireplace 2 sto	B	1	7000.00	1979		69		0.00	4,800
FPO	Ext FP Openin	B	2	2000.00	1979		69		0.00	2,800
BFA1	Bsmt Fin-Goo	B	500	32.56	1979		69		0.00	11,200
WDC	Wood Decking	L	370	20.00	1986		34		0.00	2,400
FEP	Enclosed porc	B	20	70.00	1979		69		0.00	2,200
BMT	Basement-Unfi	B	1,271	26.01	1979		69		0.00	21,600
WDC	Wood Deck w/	L	60	18.00	1992		46		0.00	1,300
PAT2	Patio-Good	L	612	9.94	1992		73		0.00	4,200
PAT2	Patio-Good	L	105	9.94	1992		73		0.00	900

BUILDING SUB-AREA SUMMARY SECTION

Code	Description	Living Area	Floor Area	Eff Area	Unit Cost	Undeprec Value
BAS	First Floor	1,271	1,271	1,271	222.77	283,141
BMT	Basement Area	0	1,271	0	0.00	0
FAT	Attic, Finished	116	775	116	33.34	25,841
FEP	Enclosed Porch	0	20	0	0.00	0
FUS	Upper Story	806	806	806	222.77	179,553
PTO	Patio	0	717	0	0.00	0
WDK	Wood Deck	0	430	0	0.00	0
	Ttl Gross Liv / Lease Area	2,193	5,290	2,193		488,535