Property Location 75 ROOSEVELT ROAD | Map ID 039/ 137/ / / | Bldg Name | State Use 1010
Vision ID 2581 | Account # 24137 | Bldg # 1 | Sec # 1 of 1 | Card # 1 of 1 | Print Date 1/30/2024 5:26:14 PM

CURRENT OWNER

HEINE, JILL A & STEPHENS, SUSAN

474 POPONESSETT ROAD

COTUIT MA 02635

TOPO / UTILITIES / STRT / ROAD / LOCATION

SUPPLEMENTAL DATA

Alt Prcl ID		Plan Ref.	
Split Zonin		Land Ct#	36608-C
BID Parcel		#SR	
ResExpt Q		Life Estate	
#DL 1	LOT 35	PP STATU	
#DL 2			
GIS ID	F_948082_2694970	Assoc Pid#	

CURRENT ASSESSMENT

Description	Code	Assessed	Assessed
RESIDNTL	1010	643,900	643,900
RES LAND	1010	178,900	178,900
Total		822,800	822,800

801

FY2024
BARNSTABLE, MA

VISION

RECORD OF OWNERSHIP

	BK-VOL/PAGE		SALE DATE	Q/U	V/I	SALE PRIC	VC
HEINE, JILL A & STEPHENS, SUSAN H	C199626	0	02-12-2013	Q	I	405,000	00
SANDLER, CAROL W	C153090	0	05-12-1999	Q	I	190,000	00
CHARLES, LORRAINE A	C106597	0	01-15-1992	U	I	1	A
CHARLES, HARRY E JR & LORRAINE A	C106597	0	05-15-1986	Q	I	170,000	U
CROSSMAN, HELEN U	C74985	0	03-15-1986	U	I	1	A

PREVIOUS ASSESSMENTS (HISTORY)

Year	Code	Assessed	Year	Code	Assessed V	Year	Code	Assessed
2023	1010	567,900	2022	1010	476,100	2021	1010	397,200
	1010	176,700		1010	125,700		1010	125,700
							1010	12,900
	Total	744,600		Total	601,800		Total	535,800

EXEMPTIONS

Year	Code	Description	Amount
		Total	0.00

OTHER ASSESSMENTS

Code	Description	Number	Amount	Comm Int

This signature acknowledges a visit by a Data Collector or Assessor

ASSESSING NEIGHBORHOOD

Nbhd	Nbhd Name	B	Tracing	Batch
0106				COTUIT

NOTES

APPRAISED VALUE SUMMARY

Appraised Bldg. Value (Card)	576,400
Appraised Xf (B) Value (Bldg)	51,700
Appraised Ob (B) Value (Bldg)	15,800
Appraised Land Value (Bldg)	178,900
Special Land Value	0
Total Appraised Parcel Value	822,800
Valuation Method	C
Total Appraised Parcel Value	822,800

BUILDING PERMIT RECORD

Permit Id	Issue Date	Type	Description	Amount	Insp Date	% Comp	Date Comp	Comments
201407989	12-23-2014	AD	Addition	70,000	12-11-2015	100	06-30-2016	ADDITION, GUEST BEDROO
201200630	02-02-2012	GN	Generator		06-30-2012	100	06-30-2012	GENERATOR
201106921	12-07-2011	NS	New Siding	6,200	06-30-2012	100	06-30-2012	RESIDE-REPLC WINDS
49297	10-13-2000	AD	Addition	60,000	09-28-2001	100	01-01-2002	16 X16 BAS + 12 X 16 FOP
38592	05-21-1999	RE	Remodel	7,000	01-01-2000	100	01-01-2000	Remodel 1st floor
B27615	03-02-1985	AD	Addition	2,400	01-15-1986	100	06-30-1986	CO ADD'N
B27615A	03-01-1985	RE	Remodel	0	01-15-1986	100	06-30-1986	CO ENCDEC

VISIT / CHANGE HISTORY

Date	Id	Type	Is	Cd	Purpost/Result
11-17-2022	SR	02		03	Cycl Insp Comp
06-10-2020	WD			FR	Field Review
12-18-2015	SR	02		02	Bldg Permit Completed
07-14-2015	SR	01		13	CALL BACK
12-18-2014	SR	02		03	Cycl Insp Comp
09-24-2014	JR	03		16	In Office Review
08-25-2014	SR	02		03	Cycl Insp Comp

LAND LINE VALUATION SECTION

B	Use Code	Description	Zone	LA	Land Units		Unit Price	Size Adj	AC Disc	Site Index	Cond.	Nbhd.	Nbhd. Adj	Notes	Location Adjustmen	Adj Unit P	Land Value
1	1010	Single Fam M-0	RF	2	0.450	AC	176,344.00	1.95982	1.0000	5	1.00	0106	1.150		1.0006	397,444.1	178,900

Total Card Land Units 0.45 AC | Parcel Total Land Area 0.45 | Total Land Value 178,900

Property Location 75 ROOSEVELT ROAD | Map ID 039/ 137/ / / | Bldg Name | State Use 1010
Vision ID 2581 | Account # 24137 | Bldg # 1 | Sec # 1 of 1 | Card # 1 of 1 | Print Date 1/30/2024 5:26:14 PM

CONSTRUCTION DETAIL

Element	Cd	Description
Style	04	Cape Cod
Model	01	Residential
Grade:	C+	Average Plus
Stories	1.75	1 3/4 Stories
Exterior Wall 1	14	Wood Shingle
Exterior Wall 2	11	Clapboard
Roof Structure	03	Gable/Hip
Roof Cover	03	Asph/F Gls/Cmp
Interior Wall 1	03	Plastered
Interior Wall 2		
Interior Floor 1	12	Hardwood
Interior Floor 2		
Heat Fuel	03	Gas
Heat Type	04	Hot Air
AC Type	03	Central
Bedrooms	03	3 Bedrooms
Full Baths	3	
Half Baths	0	
Extra Fixtures		
Total Rooms	9	
Bath Style		
Kitchen Style		
Occupancy		
Usrfld 105		
Accessory Apt		
Foundation Alt	01	Poured Conc.
Rms Prts		
Bath Split	30	3 Full-0 Half

CONSTRUCTION DETAIL (CONTINUED)

Element	Cd	Description

CONDO DATA

Parcel Id		C		Owne	0.0
		B		S	

Adjust Type	Code	Description	Factor%
Condo Flr			
Condo Unit			

COST / MARKET VALUATION

Building Value New	655,048
Year Built	1984
Effective Year Built	2003
Depreciation Code	G
Remodel Rating	
Year Remodeled	
Depreciation %	12
Functional Obsol	0
External Obsol	0
Trend Factor	1
Condition	
Condition %	
Percent Good	88
RCNLD	576,400
Dep % Ovr	
Dep Ovr Comment	
Misc Imp Ovr	
Misc Imp Ovr Comment	
Cost to Cure Ovr	
Cost to Cure Ovr Comment	

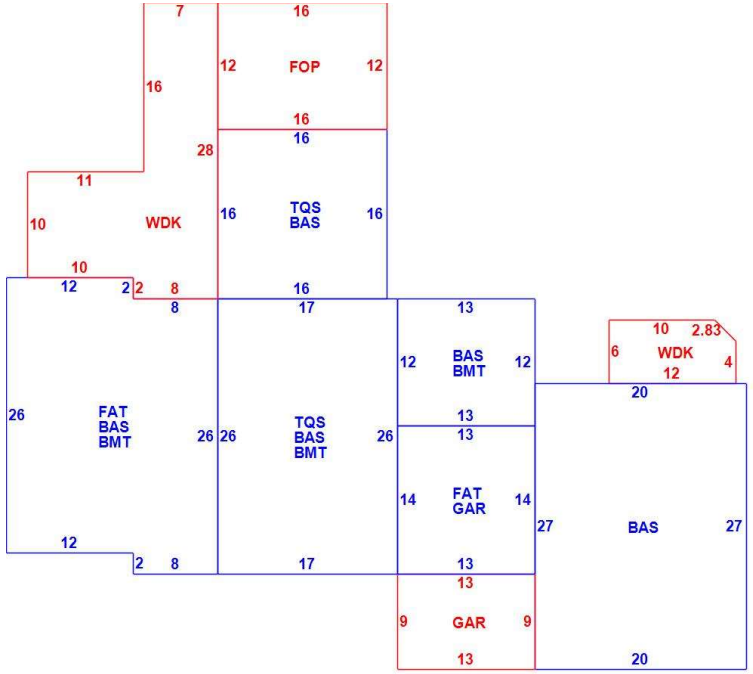

OB - OUTBUILDING & YARD ITEMS(L) / XF - BUILDING EXTRA FEATURES(B)

Code	Description	L/B	Units	Unit Price	Yr Blt	Cond. Cd	% Gd	Grade	Grade Adj.	Appr. Value
FPL2	Fireplace 1.5 s	B	1	6000.00	2005		88		0.00	5,300
FPO	Ext FP Openin	B	1	2000.00	2005		88		0.00	1,800
WDC	Deck comp w	L	308	28.00	2004		70		0.00	6,000
FOP	Open Porch-ro	B	192	55.00	2005		88		0.00	7,700
GAR	Attached Gara	B	299	40.00	2005		88		0.00	11,700
BMT	Basement-Unfi	B	1,118	26.01	2005		88		0.00	25,200
GEN	Emergency Ge	L	1	5550.00	2012		86		0.00	4,800
WDC	Deck composit	L	70	24.00	2014		90		0.00	3,600
SHED	Shed	L	96	14.64	2019		100		0.00	1,400

BUILDING SUB-AREA SUMMARY SECTION

Code	Description	Living Area	Floor Area	Eff Area	Unit Cost	Undeprec Value
BAS	First Floor	1,914	1,914	1,914	264.88	506,980
BMT	Basement Area	0	1,118	0	0.00	0
FAT	Attic, Finished	105	702	105	39.62	27,812
FOP	Open Porch	0	192	0	0.00	0
GAR	Attached Garage	0	299	0	0.00	0
TQS	Three Quarter Story	454	698	454	172.29	120,256
WDK	Wood Deck	0	378	0	0.00	0
	Ttl Gross Liv / Lease Area	2,473	5,301	2,473		655,048