Property Location 50 OLD HARBOR ROAD | Map ID 325/ 172/ / / | Bldg Name | State Use 1010
Vision ID 27123 | Account # 239593 | Bldg # 1 | Sec # 1 of 1 | Card # 1 of 1 | Print Date 2/5/2024 8:14:32 PM

## CURRENT OWNER

CWYNAR, PHILIP J TR
PHILIP J CWYNAR TRUST
50 OLD HARBOR ROAD

HYANNIS MA 02601

| TOPO | UTILITIES | STRT / ROAD | LOCATION |
|---|---|---|---|
| 1 Level | 1 All Public | 1 Paved | |

## SUPPLEMENTAL DATA

| | | | |
|---|---|---|---|
| Alt Prcl ID | | Plan Ref. | |
| Split Zonin | | Land Ct# | |
| BID Parcel | | #SR | |
| ResExpt Q | YES: | Life Estate | |
| #DL 1 | LOT 108 | PP STATU | |
| #DL 2 | | | |
| GIS ID | F_990019_2698493 | Assoc Pid# | |

## CURRENT ASSESSMENT

| Description | Code | Assessed | Assessed |
|---|---|---|---|
| RESIDNTL | 1010 | 450,900 | 450,900 |
| RES LAND | 1010 | 451,100 | 451,100 |
| | Total | 902,000 | 902,000 |

801
FY2024
BARNSTABLE, MA

**VISION**

## RECORD OF OWNERSHIP

| | BK-VOL/PAGE | | SALE DATE | Q/U | V/I | SALE PRIC | VC |
|---|---|---|---|---|---|---|---|
| CWYNAR, PHILIP J TR | C185421 | 0 | 03-11-2008 | U | I | 100 | 1F |
| CWYNAR, PHILIP J | C68938 | 0 | 11-15-1976 | Q | | 356,000 | U |

## PREVIOUS ASSESSMENTS (HISTORY)

| Year | Code | Assessed | Year | Code | Assessed V | Year | Code | Assessed |
|---|---|---|---|---|---|---|---|---|
| 2023 | 1010 | 380,300 | 2022 | 1010 | 309,200 | 2021 | 1010 | 267,900 |
| | 1010 | 317,500 | | 1010 | 269,500 | | 1010 | 245,000 |
| | | | | | | | 1010 | 9,800 |
| | Total | 697,800 | | Total | 578,700 | | Total | 522,700 |

## EXEMPTIONS

| Year | Code | Description | Amount |
|---|---|---|---|
| 2010 | 5C | RESIDENTIAL EXEMPTION | 0.00 |
| | | Total | 0.00 |

## OTHER ASSESSMENTS

| Code | Description | Number | Amount | Comm Int |
|---|---|---|---|---|
| | | | | |

This signature acknowledges a visit by a Data Collector or Assessor

## ASSESSING NEIGHBORHOOD

| Nbhd | Nbhd Name | B | Tracing | Batch |
|---|---|---|---|---|
| 0110 | | | | HYAN |

## NOTES

## APPRAISED VALUE SUMMARY

| | |
|---|---|
| Appraised Bldg. Value (Card) | 436,300 |
| Appraised Xf (B) Value (Bldg) | 4,800 |
| Appraised Ob (B) Value (Bldg) | 9,800 |
| Appraised Land Value (Bldg) | 451,100 |
| Special Land Value | 0 |
| Total Appraised Parcel Value | 902,000 |
| Valuation Method | C |
| Total Appraised Parcel Value | 902,000 |

## BUILDING PERMIT RECORD

| Permit Id | Issue Date | Type | Description | Amount | Insp Date | % Comp | Date Comp | Comments |
|---|---|---|---|---|---|---|---|---|
| 19-2383 | 07-25-2019 | 835 | Sid/Wind/Roof/ | 5,669 | | 100 | | replace 10 windows |
| B30928 | 06-01-1987 | AD | Addition | 30,000 | 01-15-1989 | 100 | | HY ADD'N |
| B30923 | 06-01-1987 | OB | Out Building | 500 | 01-15-1988 | 100 | | HY SHED |

## VISIT / CHANGE HISTORY

| Date | Id | Type | Is | Cd | Purpost/Result |
|---|---|---|---|---|---|
| 05-12-2020 | WD | | | FR | Field Review |
| 05-18-2017 | SR | 01 | | 14 | Cyclical Inspection |
| 04-12-2002 | PT | 01 | | 00 | Meas/Listed-Interior Acces |
| 01-15-1989 | ME | 02 | | 01 | Meas/Est |

## LAND LINE VALUATION SECTION

| B | Use Code | Description | Zone | LA | Land Units | | Unit Price | Size Adj | AC Disc | Site Index | Cond. | Nbhd. | Nbhd. Adj | Notes | Location Adjustmen | Adj Unit P | Land Value |
|---|---|---|---|---|---|---|---|---|---|---|---|---|---|---|---|---|---|
| 1 | 1010 | Single Fam M-0 | RB | 4 | 0.220 | AC | 176,344.00 | 3.75053 | 1.0000 | 5 | 1.00 | 0110 | 3.100 | | 1.0000 | 2,050,298 | 451,100 |

Total Card Land Units 0.22 AC | Parcel Total Land Area 0.22 | Total Land Value 451,100

Property Location 50 OLD HARBOR ROAD | Map ID 325/ 172/ / / | Bldg Name | State Use 1010
Vision ID 27123 | Account # 239593 | Bldg # 1 | Sec # 1 of 1 | Card # 1 of 1 | Print Date 2/5/2024 8:14:32 PM

## CONSTRUCTION DETAIL

| Element | Cd | Description |
|---|---|---|
| Style | 03 | Colonial |
| Model | 01 | Residential |
| Grade: | C | Average |
| Stories | 2 | 2 Stories |
| Exterior Wall 1 | 25 | Vinyl Siding |
| Exterior Wall 2 | | |
| Roof Structure | 03 | Gable/Hip |
| Roof Cover | 03 | Asph/F Gls/Cmp |
| Interior Wall 1 | 05 | Drywall |
| Interior Wall 2 | | |
| Interior Floor 1 | 14 | Carpet |
| Interior Floor 2 | 12 | Hardwood |
| Heat Fuel | 03 | Gas |
| Heat Type | 04 | Hot Air |
| AC Type | 01 | None |
| Bedrooms | 04 | 4 Bedrooms |
| Full Baths | 2 | |
| Half Baths | 1 | |
| Extra Fixtures | | |
| Total Rooms | 8 | 8 Rooms |
| Bath Style | | |
| Kitchen Style | | |
| Occupancy | | |
| Usrfld 105 | | |
| Accessory Apt | | |
| Foundation Alt | 01 | Poured Conc. |
| Rms Prts | | |
| Bath Split | 30 | 3 Full-0 Half |

## CONSTRUCTION DETAIL (CONTINUED)

| Element | Cd | Description |
|---|---|---|
| | | |

## CONDO DATA

| Parcel Id | | C | | Owne | 0.0 |
|---|---|---|---|---|---|
| | | B | | S | |

| Adjust Type | Code | Description | Factor% |
|---|---|---|---|
| Condo Flr | | | |
| Condo Unit | | | |

## COST / MARKET VALUATION

| | |
|---|---|
| Building Value New | 545,436 |
| Year Built | 1964 |
| Effective Year Built | 1993 |
| Depreciation Code | G |
| Remodel Rating | |
| Year Remodeled | |
| Depreciation % | 20 |
| Functional Obsol | 0 |
| External Obsol | 0 |
| Trend Factor | 1 |
| Condition | |
| Condition % | |
| Percent Good | 80 |
| RCNLD | 436,300 |
| Dep % Ovr | |
| Dep Ovr Comment | |
| Misc Imp Ovr | |
| Misc Imp Ovr Comment | |
| Cost to Cure Ovr | |
| Cost to Cure Ovr Comment | |

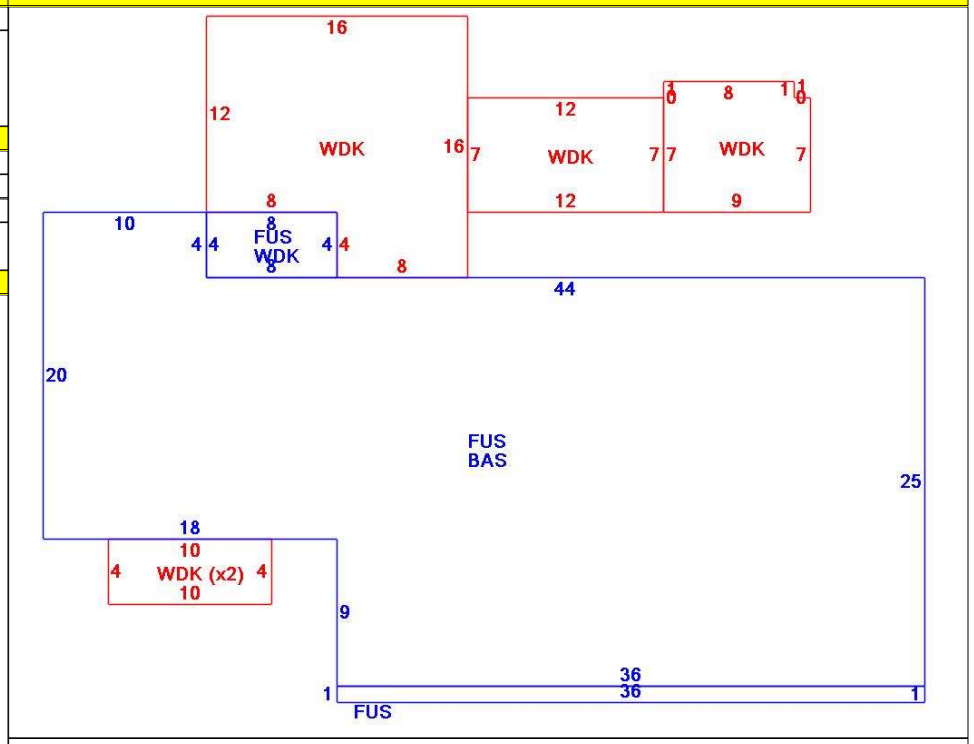

## OB - OUTBUILDING & YARD ITEMS(L) / XF - BUILDING EXTRA FEATURES(B)

| Code | Description | L/B | Units | Unit Price | Yr Blt | Cond. Cd | % Gd | Grade | Grade Adj. | Appr. Value |
|---|---|---|---|---|---|---|---|---|---|---|
| FPL2 | Fireplace 1.5 s | B | 1 | 6000.00 | 1995 | | 80 | | 0.00 | 4,800 |
| SHED | Shed | L | 144 | 18.00 | 1990 | | 42 | | 0.00 | 1,100 |
| WDC | Wood Decking | L | 380 | 20.00 | 1998 | | 58 | | 0.00 | 4,300 |
| WDC | Wood Deck w/ | L | 111 | 18.00 | 1998 | | 58 | | 0.00 | 1,900 |
| SHED | Shed | L | 24 | 18.00 | 1999 | | 60 | | 0.00 | 300 |
| WDC | Wood Deck w/ | L | 140 | 18.00 | 1999 | | 60 | | 0.00 | 2,200 |

## BUILDING SUB-AREA SUMMARY SECTION

| Code | Description | Living Area | Floor Area | Eff Area | Unit Cost | Undeprec Value |
|---|---|---|---|---|---|---|
| BAS | First Floor | 1,228 | 1,228 | 1,228 | 216.10 | 265,371 |
| FUS | Upper Story | 1,296 | 1,296 | 1,296 | 216.10 | 280,066 |
| WDK | Wood Deck | 0 | 491 | 0 | 0.00 | 0 |
| | Ttl Gross Liv / Lease Area | 2,524 | 3,015 | 2,524 | | 545,437 |