Property Location 106 CHANNEL POINT ROAD | Map ID 326/ 077/ / / | Bldg Name | State Use 1010
Vision ID 27372 | Account # 240484 | Bldg # 1 | Sec # 1 of 1 | Card # 1 of 1 | Print Date 2/5/2024 8:41:40 PM

CURRENT OWNER

HARTIGAN, SUSAN M TR
LEILA VERDE FUND REALTY TRUST
50 SADDLE RIDGE ROAD

MILTON MA 02186

TOPO	UTILITIES	STRT / ROAD	LOCATION
1 Level	1 All Public	1 Paved	7 Waterfront
			1 Excel View

SUPPLEMENTAL DATA

Alt Prcl ID		Plan Ref.	
Split Zonin		Land Ct#	7615-H
BID Parcel		#SR	
ResExpt Q		Life Estate	
#DL 1	LOT C	PP STATU	
#DL 2			
GIS ID	F_990386_2699530	Assoc Pid#	

CURRENT ASSESSMENT

Description	Code	Assessed	Assessed
RESIDNTL	1010	592,300	592,300
RES LAND	1010	987,000	987,000
Total		1,579,300	1,579,300

801
FY2024
BARNSTABLE, MA

VISION

RECORD OF OWNERSHIP

	BK-VOL/PAGE		SALE DATE	Q/U	V/I	SALE PRIC	VC
HARTIGAN, SUSAN M TR	C194958	0	08-12-2011	U	I	1,162,000	1V
SCUDDER, RICHARD M & MARJORIE F	C184340	0	10-15-2007	U	I	1	1A
SCUDDER, RICHARD M & MARJORIE F	C72318	0	11-04-1977	U		0	

PREVIOUS ASSESSMENTS (HISTORY)

Year	Code	Assessed	Year	Code	Assessed V	Year	Code	Assessed
2023	1010	516,000	2022	1010	435,300	2021	1010	308,700
	1010	897,200		1010	726,900		1010	778,800
							1010	96,600
	Total	1,413,200		Total	1,162,200		Total	1,184,100

EXEMPTIONS

Year	Code	Description	Amount
		Total	0.00

OTHER ASSESSMENTS

Code	Description	Number	Amount	Comm Int

This signature acknowledges a visit by a Data Collector or Assessor

ASSESSING NEIGHBORHOOD

Nbhd	Nbhd Name	B	Tracing	Batch
0115				HYAN

NOTES

APPRAISED VALUE SUMMARY

Appraised Bldg. Value (Card)	471,000
Appraised Xf (B) Value (Bldg)	24,700
Appraised Ob (B) Value (Bldg)	96,600
Appraised Land Value (Bldg)	987,000
Special Land Value	0
Total Appraised Parcel Value	1,579,300
Valuation Method	C
Total Appraised Parcel Value	1,579,300

BUILDING PERMIT RECORD

Permit Id	Issue Date	Type	Description	Amount	Insp Date	% Comp	Date Comp	Comments
201504084	07-02-2015	RW	Repair Work	108,000	10-25-2016	100	06-30-2017	REPAIR WATER DAMAGE O
201501896	04-17-2015	RW	Repair Work	15,000	06-22-2015	100	06-30-2016	INTERIOR DEMO DUE TO W
51286	01-25-2001	RW	Repair Work	20,000	01-01-2002	100	12-31-2002	WINDOWS, ROOF, DOORS
B31574	01-01-1988	AD	Addition	40,000	01-15-1989	100	12-31-1989	HY ADD'N
B25723	11-01-1983	AD	Addition	0	01-15-1984	100	12-31-1984	HY ADD'N
B22253	06-01-1980	AD	Addition	0	01-15-1981	100	12-31-1981	HY AD/DEC

VISIT / CHANGE HISTORY

Date	Id	Type	Is	Cd	Purpost/Result
05-12-2020	WD			FR	Field Review
04-07-2017	JR	02		02	Bldg Permit Completed
07-22-2016	JR	03		16	In Office Review
06-27-2016	SR	02		13	CALL BACK
06-01-2016	SR	02		03	Cycl Insp Comp
06-23-2015	SR	02		13	CALL BACK
05-09-2012	TP	03		16	In Office Review

LAND LINE VALUATION SECTION

B	Use Code	Description	Zone	LA	Land Units		Unit Price	Size Adj	AC Disc	Site Index	Cond.	Nbhd.	Nbhd. Adj	Notes	Location Adjustmen	Adj Unit P	Land Value
1	1010	Single Fam M-0	RB	4	0.410	AC	176,344.00	2.13291	1.0000	5	1.00	0115	6.400		1.0000	2,407,219	987,000

Total Card Land Units 0.41 AC | Parcel Total Land Area 0.41 | Total Land Value 987,000

Property Location 106 CHANNEL POINT ROAD | Map ID 326/ 077/ / / | Bldg Name | State Use 1010
Vision ID 27372 | Account # 240484 | Bldg # 1 | Sec # 1 of 1 | Card # 1 of 1 | Print Date 2/5/2024 8:41:40 PM

CONSTRUCTION DETAIL

Element	Cd	Description
Style	03	Colonial
Model	01	Residential
Grade:	C+	Average Plus
Stories	2	2 Stories
Exterior Wall 1	08	Wood on Sheath
Exterior Wall 2		
Roof Structure	03	Gable/Hip
Roof Cover	03	Asph/F Gls/Cmp
Interior Wall 1	05	Drywall
Interior Wall 2		
Interior Floor 1	14	Carpet
Interior Floor 2	12	Hardwood
Heat Fuel	02	Oil
Heat Type	05	Hot Water
AC Type	01	None
Bedrooms	03	3 Bedrooms
Full Baths	1	
Half Baths	1	
Extra Fixtures		
Total Rooms	9	9 Rooms
Bath Style		
Kitchen Style		
Occupancy		
Usrfld 105		
Accessory Apt		
Foundation Alt	01	Poured Conc.
Rms Prts		
Bath Split	11	1 Full-1 Half

CONSTRUCTION DETAIL (CONTINUED)

Element	Cd	Description

CONDO DATA

Parcel Id		C		Owne	0.0
		B		S	

Adjust Type	Code	Description	Factor%
Condo Flr			
Condo Unit			

COST / MARKET VALUATION

Building Value New	560,663
Year Built	1974
Effective Year Built	1998
Depreciation Code	G
Remodel Rating	
Year Remodeled	
Depreciation %	16
Functional Obsol	0
External Obsol	0
Trend Factor	1
Condition	
Condition %	
Percent Good	84
RCNLD	471,000
Dep % Ovr	
Dep Ovr Comment	
Misc Imp Ovr	
Misc Imp Ovr Comment	
Cost to Cure Ovr	
Cost to Cure Ovr Comment	

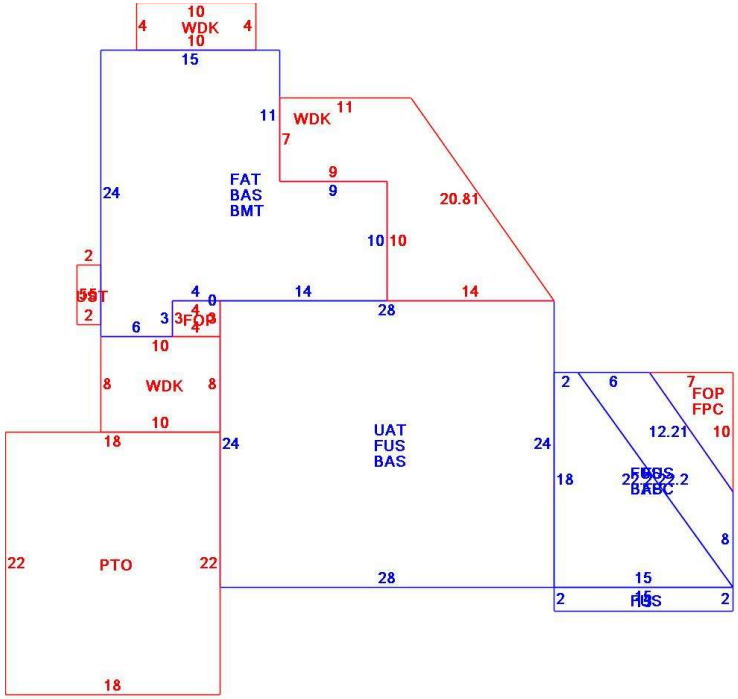

OB - OUTBUILDING & YARD ITEMS(L) / XF - BUILDING EXTRA FEATURES(B)

Code	Description	L/B	Units	Unit Price	Yr Blt	Cond. Cd	% Gd	Grade	Grade Adj.	Appr. Value
FPL2	Fireplace 1.5 s	B	1	6000.00	2000		84		0.00	5,000
DKHD	Dock-Heavy	L	1	205000.0	1991		44		0.00	90,200
WDC	Wood Decking	L	319	20.00	1996		54		0.00	3,400
PAT2	Patio-Good	L	396	9.94	1996		77		0.00	3,000
FOPC	Open Prch-roo	B	117	55.00	2000		84		0.00	4,300
BMT	Basement-Unfi	B	423	26.01	2000		84		0.00	12,500
FOP	Open Porch-ro	B	47	55.00	2000		84		0.00	2,700
UST	Utility Storage-	B	10	17.11	2000		84		0.00	200
SOLT	Solar Thermal	B	6	86.00	2000		0		0.00	0

BUILDING SUB-AREA SUMMARY SECTION

Code	Description	Living Area	Floor Area	Eff Area	Unit Cost	Undeprec Value
BAS	First Floor	1,248	1,248	1,248	242.19	302,249
BMT	Basement Area	0	423	0	0.00	0
FAT	Attic, Finished	63	423	63	36.07	15,258
FOP	Open Porch	0	47	0	0.00	0
FPC	Open Porch Conc. Floor	0	117	0	0.00	0
FUS	Upper Story	937	937	937	242.19	226,929
PTO	Patio	0	396	0	0.00	0
UAT	Attic, Unfinished	0	672	67	24.15	16,227
UST	Utility Enclosure	0	10	0	0.00	0
WDK	Wood Deck	0	319	0	0.00	0
	Ttl Gross Liv / Lease Area	2,248	4,592	2,315		560,663