Property Location 25 BAYBERRY LANE | Map ID 335/ 044/ / / | Bldg Name | State Use 1010
Vision ID 28168 | Account # 247325 | Bldg # 1 | Sec # 1 of 1 | Card # 1 of 1 | Print Date 2/5/2024 10:10:15 PM

CURRENT OWNER

ALBANESE, DAVID F & JILL L DRUHA
DRUHAN-ALBANESE FAMILY TRUST
25 BAYBERRY LANE

BARNSTABLE MA 02630

TOPO		UTILITIES		STRT / ROAD		LOCATION	
1	Level	6	Septic	1	Paved		
		4	Gas				
		2	Public Water				

SUPPLEMENTAL DATA

Alt Prcl ID		Plan Ref.	163/21
Split Zonin		Land Ct#	
BID Parcel		#SR	
ResExpt Q		Life Estate	
#DL 1	LOTS 1 & 2	PP STATU	
#DL 2			
GIS ID	F_989373_2718162	Assoc Pid#	

CURRENT ASSESSMENT

Description	Code	Assessed	Assessed
RESIDNTL	1010	326,200	326,200
RES LAND	1010	300,500	300,500
Total		626,700	626,700

801
FY2024
BARNSTABLE, MA

VISION

RECORD OF OWNERSHIP

	BK-VOL/PAGE		SALE DATE	Q/U	V/I	SALE PRIC	VC
ALBANESE, DAVID F & JILL L DRUHAN-	34891	195	02-09-2022	U	I	1	1F
ALBANESE, DAVID F & JILL L DRUHAN-	32978	0161	06-12-2020	Q	I	495,000	00
DEAL, KYLE R & COTE, ASHLEY M	29830	0349	07-29-2016	Q	I	385,000	00
LOUREIRO, ROBIN M	28018	0175	03-05-2014	U	I	215,000	1
HODGSON, LAURA A ET AL	22045	0277	05-22-2007	U	I	1	1A

PREVIOUS ASSESSMENTS (HISTORY)

Year	Code	Assessed	Year	Code	Assessed V	Year	Code	Assessed
2023	1010	287,100	2022	1010	238,000	2021	1010	200,200
	1010	297,400		1010	190,700		1010	202,600
							1010	2,600
	Total	584,500		Total	428,700		Total	405,400

EXEMPTIONS

Year	Code	Description	Amount
		Total	0.00

OTHER ASSESSMENTS

Code	Description	Number	Amount	Comm Int

This signature acknowledges a visit by a Data Collector or Assessor

ASSESSING NEIGHBORHOOD

Nbhd	Nbhd Name	B	Tracing	Batch
0108				BARNS

NOTES

APPRAISED VALUE SUMMARY

Appraised Bldg. Value (Card)	308,500
Appraised Xf (B) Value (Bldg)	15,100
Appraised Ob (B) Value (Bldg)	2,600
Appraised Land Value (Bldg)	300,500
Special Land Value	0
Total Appraised Parcel Value	626,700
Valuation Method	C
Total Appraised Parcel Value	626,700

BUILDING PERMIT RECORD

Permit Id	Issue Date	Type	Description	Amount	Insp Date	% Comp	Date Comp	Comments

VISIT / CHANGE HISTORY

Date	Id	Type	Is	Cd	Purpost/Result
07-28-2020	CK	03		16	In Office Review
05-05-2020	DM			FR	Field Review
08-19-2016	AL	03		16	In Office Review
07-31-2014	AL	22		22	Change of Address
01-13-2014	JR	03		15	Abatement Review
09-05-2000	MF	01		00	Meas/Listed-Interior Acces

LAND LINE VALUATION SECTION

B	Use Code	Description	Zone	LA	Land Units		Unit Price	Size Adj	AC Disc	Site Index	Cond.	Nbhd.	Nbhd. Adj	Notes	Location Adjustmen	Adj Unit P	Land Value
1	1010	Single Fam M-0	RF-2	1	1.000	AC	176,344.00	1.00000	1.0000	5	1.00	0108	1.700	EASEMENT	1.0000	299,784.8	299,800
1	1010	Single Fam M-0	RF-2	1	0.030	AC	14,250.00	1.00000	1.0000	0	1.00	0108	1.700	EASEMENT	1.0000	24,225	700

Total Card Land Units 1.03 AC | Parcel Total Land Area 1.03 | Total Land Value 300,500

Property Location 25 BAYBERRY LANE | Map ID 335/ 044/ / / | Bldg Name | State Use 1010
Vision ID 28168 | Account # 247325 | Bldg # 1 | Sec # 1 of 1 | Card # 1 of 1 | Print Date 2/5/2024 10:10:16 PM

CONSTRUCTION DETAIL

Element	Cd	Description
Style	04	Cape Cod
Model	01	Residential
Grade:	C	Average
Stories	1.5	1 1/2 Stories
Exterior Wall 1	14	Wood Shingle
Exterior Wall 2		
Roof Structure	03	Gable/Hip
Roof Cover	03	Asph/F Gls/Cmp
Interior Wall 1	05	Drywall
Interior Wall 2		
Interior Floor 1	14	Carpet
Interior Floor 2		
Heat Fuel	03	Gas
Heat Type	05	Hot Water
AC Type	03	Central
Bedrooms	03	3 Bedrooms
Full Baths	2	
Half Baths	0	
Extra Fixtures		
Total Rooms	6	
Bath Style		
Kitchen Style		
Occupancy		
Usrfld 105		
Accessory Apt		
Foundation Alt	09	Blk/Pour Ftgs
Rms Prts		
Bath Split	20	2 Full-0 Half

CONSTRUCTION DETAIL (CONTINUED)

Element	Cd	Description

CONDO DATA

Parcel Id		C		Owne	0.0
		B		S	

Adjust Type	Code	Description	Factor%
Condo Flr			
Condo Unit			

COST / MARKET VALUATION

Building Value New	400,601
Year Built	1967
Effective Year Built	1989
Depreciation Code	A
Remodel Rating	
Year Remodeled	
Depreciation %	23
Functional Obsol	0
External Obsol	0
Trend Factor	1
Condition	
Condition %	
Percent Good	77
RCNLD	308,500
Dep % Ovr	
Dep Ovr Comment	
Misc Imp Ovr	
Misc Imp Ovr Comment	
Cost to Cure Ovr	
Cost to Cure Ovr Comment	

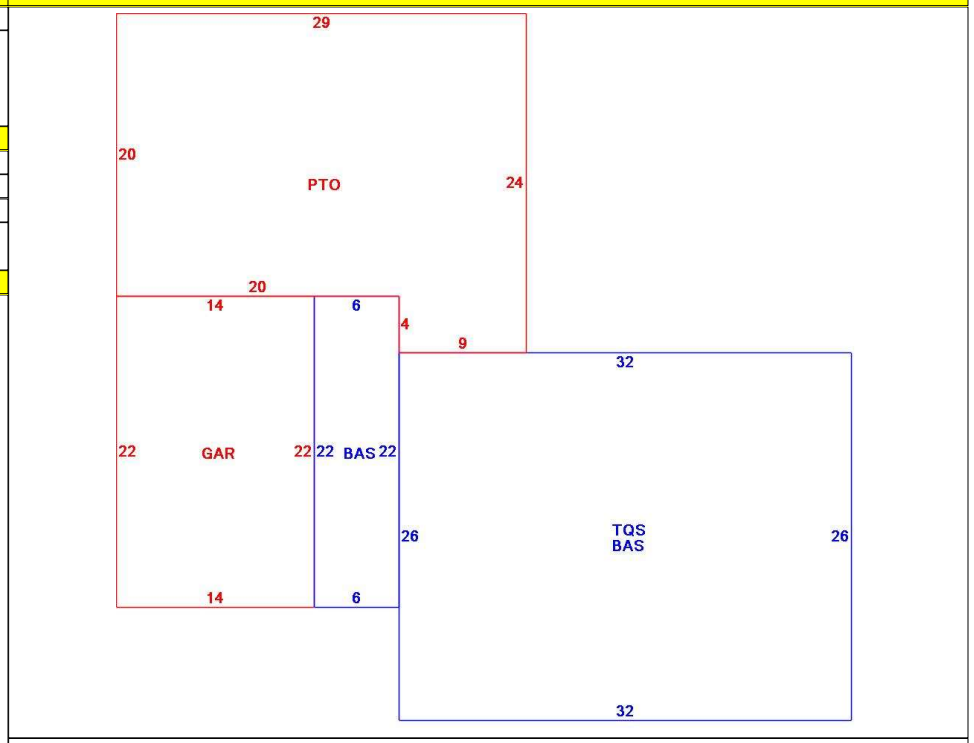

OB - OUTBUILDING & YARD ITEMS(L) / XF - BUILDING EXTRA FEATURES(B)

Code	Description	L/B	Units	Unit Price	Yr Blt	Cond. Cd	% Gd	Grade	Grade Adj.	Appr. Value
FPL2	Fireplace 1.5 s	B	1	6000.00	1991		77		0.00	4,600
PAT1	Patio- Average	L	616	5.89	1995		76		0.00	2,600
GAR	Attached Gara	B	308	40.00	1991		77		0.00	10,500

BUILDING SUB-AREA SUMMARY SECTION

Code	Description	Living Area	Floor Area	Eff Area	Unit Cost	Undeprec Value
BAS	First Floor	964	964	964	266.18	256,598
GAR	Attached Garage	0	308	0	0.00	0
PTO	Patio	0	616	0	0.00	0
TQS	Three Quarter Story	541	832	541	173.08	144,003
	Ttl Gross Liv / Lease Area	1,505	2,720	1,505		400,601