Property Location 522 COTUIT BAY DRIVE | Map ID 055/ 037/ / / | Bldg Name | State Use 1010
Vision ID 3551 | Account # 31575 | Bldg # 1 | Sec # 1 of 1 | Card # 1 of 1 | Print Date 1/30/2024 7:19:39 PM

CURRENT OWNER

HANCOX, FREDERICK W III & KATHL

522 COTUIT BAY DRIVE

COTUIT MA 02635

TOPO / UTILITIES / STRT / ROAD / LOCATION

TOPO		UTILITIES		STRT / ROAD		LOCATION	
1	Level	2	Public Water			9	Rear Location
		4	Gas	1	Paved		
		6	Septic				

SUPPLEMENTAL DATA

Alt Prcl ID		Plan Ref.	
Split Zonin		Land Ct#	3216-C (SH 4)
BID Parcel		#SR	
ResExpt Q	NO APP:	Life Estate	
#DL 1	LOT 25	PP STATU	
#DL 2			
GIS ID	F_951457_2693127	Assoc Pid#	

CURRENT ASSESSMENT

Description	Code	Assessed	Assessed
RESIDNTL	1010	524,600	524,600
RES LAND	1010	294,800	294,800
Total		819,400	819,400

801

FY2024
BARNSTABLE, MA

VISION

RECORD OF OWNERSHIP

	BK-VOL/PAGE		SALE DATE	Q/U	V/I	SALE PRIC	VC
HANCOX, FREDERICK W III & KATHLEE	C224622	0	12-04-2020	Q	I	649,900	00
CONWAY, BERNARD A & JENIFFER A	C194504	0	06-15-2011	Q	I	502,000	00
FLETCHER, SUSAN SMITH TR	C182760	0	04-06-2007	U	I	1	1A
FLETCHER, DOUGLAS & SUSAN	C144901	0	06-24-1997	Q	I	285,000	00
PETRASKO, DAVID C & GEORGIA	C131479	0	09-15-1993	Q	I	282,500	U

PREVIOUS ASSESSMENTS (HISTORY)

Year	Code	Assessed	Year	Code	Assessed V	Year	Code	Assessed
2023	1010	422,000	2022	1010	392,500	2021	1010	329,500
	1010	291,600		1010	186,800		1010	198,500
							1010	17,400
	Total	713,600		Total	579,300		Total	545,400

EXEMPTIONS

Year	Code	Description	Amount
2022	N5C	NO RESIDENTIAL EXEMPTION	0.00
		Total	0.00

OTHER ASSESSMENTS

Code	Description	Number	Amount	Comm Int

This signature acknowledges a visit by a Data Collector or Assessor

ASSESSING NEIGHBORHOOD

Nbhd	Nbhd Name	B	Tracing	Batch
0108				COTUIT

NOTES

APPRAISED VALUE SUMMARY

Appraised Bldg. Value (Card)	438,700
Appraised Xf (B) Value (Bldg)	68,500
Appraised Ob (B) Value (Bldg)	17,400
Appraised Land Value (Bldg)	294,800
Special Land Value	0
Total Appraised Parcel Value	819,400
Valuation Method	C
Total Appraised Parcel Value	819,400

BUILDING PERMIT RECORD

Permit Id	Issue Date	Type	Description	Amount	Insp Date	% Comp	Date Comp	Comments
BLDR-21-11	02-12-2021	880	Alt-Int work-Res	30,000		100		Relocating kitchen
16-2977	10-12-2016	880	Alt-Int work-Res	41,000	02-06-2017	100	06-30-2017	renovation to (4) bathrooms , n
201406839	10-08-2014	NR	New Roof	15,000	06-30-2015	100	06-30-2015	RE-ROOFING GOING OVER
201406748	10-06-2014	GN	Generator	0	01-07-2015	100	06-30-2015	GENERATOR & TEST
B21274	05-01-1979	DW	Dwelling	0	01-15-1980	100	06-30-1980	CO 1 STOR
B21243	04-01-1979	SP	Swimming Pool	0	01-15-1980	100	06-30-1980	CO POOL

VISIT / CHANGE HISTORY

Date	Id	Type	Is	Cd	Purpost/Result
06-08-2020	WD			FR	Field Review
02-06-2017	SR	03		02	Bldg Permit Completed
01-07-2015	RB	03		16	In Office Review
02-12-2014	GC	03		16	In Office Review
01-09-2012	NF	01		20	Sale Review
09-20-2005	PT	02		01	Meas/Est
04-16-1999	FS	01		00	Meas/Listed-Interior Acces

LAND LINE VALUATION SECTION

B	Use Code	Description	Zone	LA	Land Units		Unit Price	Size Adj	AC Disc	Site Index	Cond.	Nbhd.	Nbhd. Adj	Notes	Location Adjustmen	Adj Unit P	Land Value
1	1010	Single Fam M-0	RF	2	0.820	AC	176,344.00	1.19913	1.0000	5	1.00	0108	1.700		1.0000	359,477.2	294,800

Total Card Land Units 0.82 AC | Parcel Total Land Area 0.82 | Total Land Value 294,800

Property Location 522 COTUIT BAY DRIVE | Map ID 055/ 037/ / / | Bldg Name | State Use 1010
Vision ID 3551 | Account # 31575 | Bldg # 1 | Sec # 1 of 1 | Card # 1 of 1 | Print Date 1/30/2024 7:19:40 PM

CONSTRUCTION DETAIL

Element	Cd	Description
Style	07	Modern/Contemp
Model	01	Residential
Grade:	C+	Average Plus
Stories	1	1 Story
Exterior Wall 1	14	Wood Shingle
Exterior Wall 2	11	Clapboard
Roof Structure	03	Gable/Hip
Roof Cover	01	Metal/Tin
Interior Wall 1	05	Drywall
Interior Wall 2		
Interior Floor 1	12	Hardwood
Interior Floor 2		
Heat Fuel	03	Gas
Heat Type	04	Hot Air
AC Type	03	Central
Bedrooms	02	2 Bedrooms
Full Baths	3	
Half Baths	1	
Extra Fixtures		
Total Rooms	5	5 Rooms
Bath Style		
Kitchen Style		
Occupancy		
Usrfld 105		
Accessory Apt		
Foundation Alt	01	Poured Conc.
Rms Prts		
Bath Split	31	3 Full-1 Half

CONSTRUCTION DETAIL (CONTINUED)

Element	Cd	Description

CONDO DATA

Parcel Id		C		Owne	0.0
		B		S	

Adjust Type	Code	Description	Factor%
Condo Flr			
Condo Unit			

COST / MARKET VALUATION

Building Value New	516,105
Year Built	1979
Effective Year Built	2000
Depreciation Code	G
Remodel Rating	
Year Remodeled	
Depreciation %	15
Functional Obsol	0
External Obsol	0
Trend Factor	1
Condition	
Condition %	
Percent Good	85
RCNLD	438,700
Dep % Ovr	
Dep Ovr Comment	
Misc Imp Ovr	
Misc Imp Ovr Comment	
Cost to Cure Ovr	
Cost to Cure Ovr Comment	

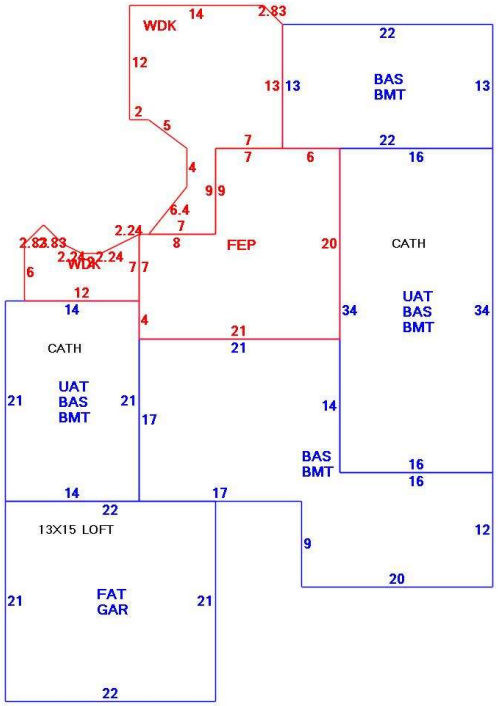

OB - OUTBUILDING & YARD ITEMS(L) / XF - BUILDING EXTRA FEATURES(B)

Code	Description	L/B	Units	Unit Price	Yr Blt	Cond. Cd	% Gd	Grade	Grade Adj.	Appr. Value
FPL1	Fireplace 1 sto	B	1	5000.00	2002		85		0.00	4,300
SPL3	Pool Gunite	L	576	75.00	1979		20	00	1.00	9,300
FEP	Enclosed porc	B	348	70.00	2002		85		0.00	15,900
GAR	Attached Gara	B	462	40.00	2002		85		0.00	15,000
BMT	Basement-Unfi	B	1,709	26.01	2002		85		0.00	33,300
SHD2	Shed w/Elec	L	140	26.00	1985		32		0.00	1,200
WDC	Wood Deck w/	L	336	18.00	1985		32		0.00	1,900
GEN	Emergency Ge	L	1	5550.00	2014		90		0.00	5,000

BUILDING SUB-AREA SUMMARY SECTION

Code	Description	Living Area	Floor Area	Eff Area	Unit Cost	Undeprec Value
BAS	First Floor	1,709	1,709	1,709	277.18	473,697
BMT	Basement Area	0	1,709	0	0.00	0
FAT	Attic, Finished	69	462	69	41.40	19,125
FEP	Enclosed Porch	0	348	0	0.00	0
GAR	Attached Garage	0	462	0	0.00	0
UAT	Attic, Unfinished	0	838	84	27.78	23,283
WDK	Wood Deck	0	336	0	0.00	0
	Ttl Gross Liv / Lease Area	1,778	5,864	1,862		516,105