Property Location 37 SHAMMAS LANE | Map ID 065/ 004/ 006/ / | Bldg Name | State Use 1010
Vision ID 4287 | Account # 392603 | Bldg # 1 | Sec # 1 of 1 | Card # 1 of 2 | Print Date 1/30/2024 8:43:49 PM

CURRENT OWNER

REILLY, KIM E

37 SHAMMAS LANE

MARSTONS MIL MA 02648

TOPO		UTILITIES		STRT / ROAD		LOCATION	
1	Level	6	Septic	1	Paved		
		4	Gas				
		2	Public Water				

SUPPLEMENTAL DATA

Alt Prcl ID		Plan Ref.	
Split Zonin		Land Ct#	38973-F
BID Parcel		#SR	
ResExpt Q	YES:	Life Estate	
#DL 1	LOT 14	PP STATU	
#DL 2			
GIS ID	F_949290_2712653	Assoc Pid#	

CURRENT ASSESSMENT

Description	Code	Assessed	Assessed
RESIDNTL	1010	486,200	486,200
RES LAND	1010	176,400	176,400
	Total	662,600	662,600

801

FY2024
BARNSTABLE, MA

VISION

RECORD OF OWNERSHIP

	BK-VOL/PAGE		SALE DATE	Q/U	V/I	SALE PRIC	VC
REILLY, KIM E	C228541	0	12-14-2021	U	I	1	1F
CANUSO, SAUNIE TR	C207433	0	09-21-2015	Q	I	355,000	00
HARRIS, ELIZABETH C	C199601	0	02-07-2013	U	I	1	1F
HARRIS, TIMOTHY H & ELIZABETH C	C174682	0	10-12-2004	Q	I	359,000	00
NAGLE, MILDRED R	C116008	0	11-15-1988	Q	I	160,000	U

PREVIOUS ASSESSMENTS (HISTORY)

Year	Code	Assessed	Year	Code	Assessed V	Year	Code	Assessed
2023	1010	424,600	2022	1010	376,400	2021	1010	276,200
	1010	160,400		1010	118,900		1010	118,900
							1010	41,100
	Total	585,000		Total	495,300		Total	436,200

EXEMPTIONS

Year	Code	Description	Amount
2023	5C	RESIDENTIAL EXEMPTION	0.00
		Total	0.00

OTHER ASSESSMENTS

Code	Description	Number	Amount	Comm Int

This signature acknowledges a visit by a Data Collector or Assessor

APPRAISED VALUE SUMMARY

Appraised Bldg. Value (Card)	387,500
Appraised Xf (B) Value (Bldg)	57,600
Appraised Ob (B) Value (Bldg)	41,100
Appraised Land Value (Bldg)	176,400
Special Land Value	0
Total Appraised Parcel Value	662,600
Valuation Method	C
Total Appraised Parcel Value	662,600

ASSESSING NEIGHBORHOOD

Nbhd	Nbhd Name	B	Tracing	Batch
0105				MARSTM

NOTES

BUILDING PERMIT RECORD

Permit Id	Issue Date	Type	Description	Amount	Insp Date	% Comp	Date Comp	Comments
201508706	12-30-2015	SP	Swimming Pool	29,494	09-12-2016	100	06-30-2017	INGROUND SWINNING POO
81158	12-08-2004	NR	New Roof	9,575	09-12-2005	100	01-01-2006	
B32402	11-01-1988	DW	Dwelling	75,000	03-15-1989	100	12-31-1989	MM 1 STOR

VISIT / CHANGE HISTORY

Date	Id	Type	Is	Cd	Purpost/Result
07-08-2022	JO			16	In Office Review
05-10-2022	BM	03		16	In Office Review
07-27-2020	LH	03		16	In Office Review
05-18-2020	CK	22		22	Change of Address
05-13-2020	LS			FR	Field Review
07-27-2018	KM	22		22	Change of Address
02-14-2017	SR	02		02	Bldg Permit Completed

LAND LINE VALUATION SECTION

B	Use Code	Description	Zone	LA	Land Units		Unit Price	Size Adj	AC Disc	Site Index	Cond.	Nbhd.	Nbhd. Adj	Notes	Location Adjustmen	Adj Unit P	Land Value
1	1010	Single Fam M-0	RF	3	1.000	AC	176,344.00	1.00000	1.0000	5	1.00	0105	1.000		1.0000	176,344	176,300
1	1010	Single Fam M-0	RF	3	0.010	AC	14,250.00	1.00000	1.0000	0	1.00	0105	1.000		1.0000	14,250	100

Total Card Land Units 1.01 AC | Parcel Total Land Area 1.01 | Total Land Value 176,400

Property Location 37 SHAMMAS LANE | Map ID 065/ 004/ 006/ / | Bldg Name | State Use 1010
Vision ID 4287 | Account # 392603 | Bldg # 1 | Sec # 1 of 1 | Card # 1 of 2 | Print Date 1/30/2024 8:43:50 PM

CONSTRUCTION DETAIL

Element	Cd	Description
Style	01	Ranch
Model	01	Residential
Grade:	C	Average
Stories	1	1 Story
Exterior Wall 1	14	Wood Shingle
Exterior Wall 2	11	Clapboard
Roof Structure	03	Gable/Hip
Roof Cover	03	Asph/F Gls/Cmp
Interior Wall 1	05	Drywall
Interior Wall 2		
Interior Floor 1	14	Carpet
Interior Floor 2	12	Hardwood
Heat Fuel	03	Gas
Heat Type	04	Hot Air
AC Type	03	Central
Bedrooms	03	3 Bedrooms
Full Baths	2	
Half Baths	0	
Extra Fixtures		
Total Rooms	6	6 Rooms
Bath Style		
Kitchen Style		
Occupancy		
Usrfld 105		
Accessory Apt		
Foundation Alt	01	Poured Conc.
Rms Prts		
Bath Split	20	2 Full-0 Half

CONSTRUCTION DETAIL (CONTINUED)

Element	Cd	Description

CONDO DATA

Parcel Id		C		Owne	0.0
		B		S	

Adjust Type	Code	Description	Factor%
Condo Flr			
Condo Unit			

COST / MARKET VALUATION

Building Value New	455,879
Year Built	1988
Effective Year Built	2000
Depreciation Code	A
Remodel Rating	
Year Remodeled	
Depreciation %	15
Functional Obsol	0
External Obsol	0
Trend Factor	1
Condition	
Condition %	
Percent Good	85
RCNLD	387,500
Dep % Ovr	
Dep Ovr Comment	
Misc Imp Ovr	
Misc Imp Ovr Comment	
Cost to Cure Ovr	
Cost to Cure Ovr Comment	

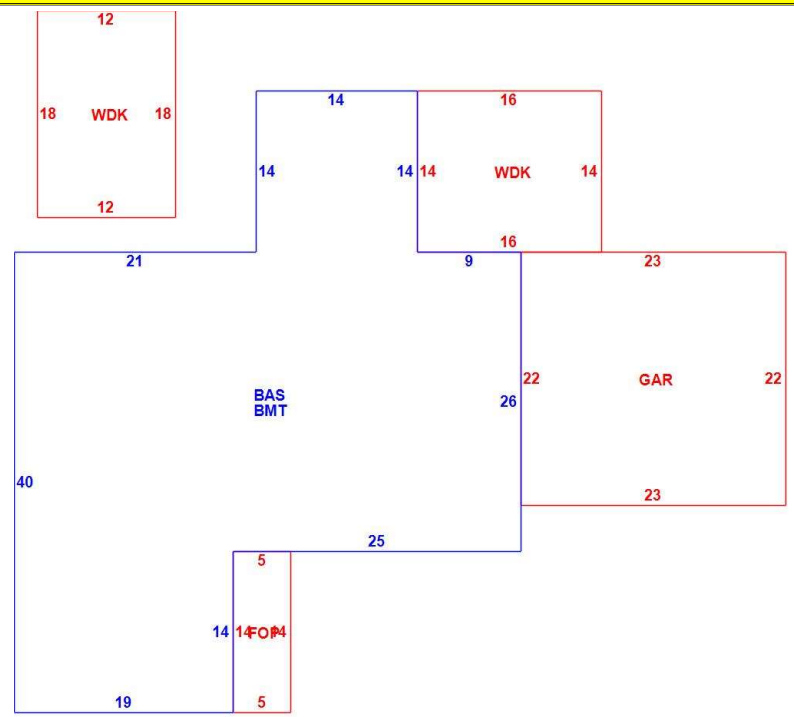

OB - OUTBUILDING & YARD ITEMS(L) / XF - BUILDING EXTRA FEATURES(B)

Code	Description	L/B	Units	Unit Price	Yr Blt	Cond. Cd	% Gd	Grade	Grade Adj.	Appr. Value
FPL1	Fireplace 1 sto	B	1	5000.00	2002		85		0.00	4,300
WDC	Wood Decking	L	224	20.00	2000		62		0.00	3,100
FOP	Open Porch-ro	B	70	55.00	2002		85		0.00	3,700
GAR	Attached Gara	B	506	40.00	2002		85		0.00	15,900
BMT	Basement-Unfi	B	1,606	26.01	2002		85		0.00	31,600
FPLG	Gas Fireplace-	B	1	2500.00	2002		85		0.00	2,100
SHD2	Shed w/Elec	L	120	26.00	1999		60		0.00	1,900
SHD2	Shed w/Elec	L	120	26.00	1999		60		0.00	1,900
SPL2	Pool Vinyl	L	450	55.00	2015		92	00	1.00	23,500
WDC	Wood Deck w/	L	216	18.00	2015		92		0.00	4,100

BUILDING SUB-AREA SUMMARY SECTION

Code	Description	Living Area	Floor Area	Eff Area	Unit Cost	Undeprec Value
BAS	First Floor	1,606	1,606	1,606	283.86	455,879
BMT	Basement Area	0	1,606	0	0.00	0
FOP	Open Porch	0	70	0	0.00	0
GAR	Attached Garage	0	506	0	0.00	0
WDK	Wood Deck	0	440	0	0.00	0
	Ttl Gross Liv / Lease Area	1,606	4,228	1,606		455,879

Property Location 37 SHAMMAS LANE | Map ID 065/ 004/ 006/ / | Bldg Name | State Use 1010
Vision ID 4287 | Account # 392603 | Bldg # 1 | Sec # 1 of 1 | Card # 2 of 2 | Print Date 1/30/2024 8:43:50 PM

CURRENT OWNER

REILLY, KIM E

37 SHAMMAS LANE

MARSTONS MIL MA 02648

TOPO		UTILITIES		STRT / ROAD		LOCATION	
1	Level	6	Septic	1	Paved		
		4	Gas				
		2	Public Water				

SUPPLEMENTAL DATA

Alt Prcl ID		Plan Ref.	
Split Zonin		Land Ct#	38973-F
BID Parcel		#SR	
ResExpt Q	YES:	Life Estate	
#DL 1	LOT 14	PP STATU	
#DL 2			
GIS ID	F_949290_2712653	Assoc Pid#	

CURRENT ASSESSMENT

Description	Code	Assessed	Assessed
RESIDNTL	1010	486,200	486,200
RES LAND	1010	176,400	176,400
	Total	662,600	662,600

801

FY2024
BARNSTABLE, MA

VISION

RECORD OF OWNERSHIP

BK-VOL/PAGE		SALE DATE	Q/U	V/I	SALE PRIC	VC

PREVIOUS ASSESSMENTS (HISTORY)

Year	Code	Assessed	Year	Code	Assessed V	Year	Code	Assessed
2023	1010	424,600	2022	1010	376,400	2021	1010	276,200
	1010	160,400		1010	118,900		1010	118,900
							1010	41,100
	Total	585,000		Total	495,300		Total	436,200

EXEMPTIONS

Year	Code	Description	Amount
		Total	

OTHER ASSESSMENTS

Code	Description	Number	Amount	Comm Int

This signature acknowledges a visit by a Data Collector or Assessor

ASSESSING NEIGHBORHOOD

Nbhd	Nbhd Name	B	Tracing	Batch
0105				MARSTM

NOTES

APPRAISED VALUE SUMMARY

Appraised Bldg. Value (Card)	387,500
Appraised Xf (B) Value (Bldg)	57,600
Appraised Ob (B) Value (Bldg)	41,100
Appraised Land Value (Bldg)	176,400
Special Land Value	0
Total Appraised Parcel Value	662,600
Valuation Method	C
Total Appraised Parcel Value	662,600

BUILDING PERMIT RECORD

Permit Id	Issue Date	Type	Description	Amount	Insp Date	% Comp	Date Comp	Comments

VISIT / CHANGE HISTORY

Date	Id	Type	Is	Cd	Purpost/Result

LAND LINE VALUATION SECTION

B	Use Code	Description	Zone	LA	Land Units		Unit Price	Size Adj	AC Disc	Site Index	Cond.	Nbhd.	Nbhd. Adj	Notes	Location Adjustmen		Adj Unit P	Land Value

Total Card Land Units | Parcel Total Land Area | Total Land Value

Property Location 37 SHAMMAS LANE | Map ID 065/ 004/ 006/ / | Bldg Name | State Use 1010
Vision ID 4287 | Account # 392603 | Bldg # 1 | Sec # 1 of 1 | Card # 2 of 2 | Print Date 1/30/2024 8:43:50 PM

CONSTRUCTION DETAIL

Element	Cd	Description
Style	01	Ranch
Model	01	Residential
Grade:	C	Average
Stories	1	1 Story
Exterior Wall 1	14	Wood Shingle
Exterior Wall 2	11	Clapboard
Roof Structure	03	Gable/Hip
Roof Cover	03	Asph/F Gls/Cmp
Interior Wall 1	05	Drywall
Interior Wall 2		
Interior Floor 1	14	Carpet
Interior Floor 2	12	Hardwood
Heat Fuel	03	Gas
Heat Type	04	Hot Air
AC Type	03	Central
Bedrooms	03	3 Bedrooms
Full Baths	2	
Half Baths	0	
Extra Fixtures		
Total Rooms	6	6 Rooms
Bath Style		
Kitchen Style		
Occupancy		
Usrfld 105		
Accessory Apt		
Foundation Alt	01	Poured Conc.
Rms Prts		
Bath Split	20	2 Full-0 Half

CONSTRUCTION DETAIL (CONTINUED)

Element	Cd	Description

CONDO DATA

Parcel Id		C		Owne	0.0
		B		S	

Adjust Type	Code	Description	Factor%
Condo Flr			
Condo Unit			

COST / MARKET VALUATION

Building Value New	
Year Built	
Effective Year Built	
Depreciation Code	
Remodel Rating	
Year Remodeled	
Depreciation %	
Functional Obsol	
External Obsol	
Trend Factor	
Condition	
Condition %	
Percent Good	
RCNLD	
Dep % Ovr	
Dep Ovr Comment	
Misc Imp Ovr	
Misc Imp Ovr Comment	
Cost to Cure Ovr	
Cost to Cure Ovr Comment	

OB - OUTBUILDING & YARD ITEMS(L) / XF - BUILDING EXTRA FEATURES(B)

Code	Description	L/B	Units	Unit Price	Yr Blt	Cond. Cd	% Gd	Grade	Grade Adj.	Appr. Value
PAT2	Patio-Good	L	727	9.94	2016		97		0.00	6,600

BUILDING SUB-AREA SUMMARY SECTION

Code	Description	Living Area	Floor Area	Eff Area	Unit Cost	Undeprec Value
Ttl Gross Liv / Lease Area						