Property Location 161 MARQUAND DRIVE | Map ID 077/ 037/ 004/ / | Bldg Name | State Use 1010
Vision ID 4679 | Account # 40119 | Bldg # 1 | Sec # 1 of 1 | Card # 1 of 2 | Print Date 1/30/2024 9:29:23 PM

CURRENT OWNER

COTTON, JOHN B JR & ANN MARIE

PO BOX 68

OSTERVILLE MA 02655

TOPO		UTILITIES		STRT / ROAD		LOCATION	
3	Below Street	2	Public Water	1	Paved	1	Marginal View
		4	Gas				
		6	Septic				

SUPPLEMENTAL DATA

Alt Prcl ID		Plan Ref.	567/57
Split Zonin		Land Ct#	23111-B (SH 2)
BID Parcel		#SR	
ResExpt Q	YES:	Life Estate	
#DL 1	LOT 4	PP STATU	
#DL 2			
GIS ID	F_954318_2699370	Assoc Pid#	

CURRENT ASSESSMENT

Description	Code	Assessed	Assessed
RESIDNTL	1010	1,326,100	1,326,100
RES LAND	1010	588,600	588,600
Total		1,914,700	1,914,700

801

FY2024
BARNSTABLE, MA

VISION

RECORD OF OWNERSHIP

	BK-VOL/PAGE		SALE DATE	Q/U	V/I	SALE PRIC	VC
COTTON, JOHN B JR & ANN MARIE	C158418	0	07-19-2000	Q	I	990,000	00
SCHREINER, WILLIAM & CAROLYN	C133993	0	06-15-1994	U	I	265,000	D
CHAIKIN, RICHARD W	C96553	0	05-15-1984	U	V	0	H
CHAIKIN, JOSSELYN A	C87793	0	01-13-1982	Q	V	54,750	U

PREVIOUS ASSESSMENTS (HISTORY)

Year	Code	Assessed	Year	Code	Assessed V	Year	Code	Assessed
2023	1010	1,174,600	2022	1010	969,900	2021	1010	761,100
	1010	696,800		1010	406,400		1010	432,900
							1010	76,900
	Total	1,871,400		Total	1,376,300		Total	1,270,900

EXEMPTIONS

Year	Code	Description	Amount
2024	5C	RESIDENTIAL EXEMPTION	
		Total	0.00

OTHER ASSESSMENTS

Code	Description	Number	Amount	Comm Int

This signature acknowledges a visit by a Data Collector or Assessor

ASSESSING NEIGHBORHOOD

Nbhd	Nbhd Name	B	Tracing	Batch
0111				MARSTM

NOTES

APPRAISED VALUE SUMMARY

Appraised Bldg. Value (Card)	1,134,900
Appraised Xf (B) Value (Bldg)	101,100
Appraised Ob (B) Value (Bldg)	90,100
Appraised Land Value (Bldg)	588,600
Special Land Value	0
Total Appraised Parcel Value	1,914,700
Valuation Method	C
Total Appraised Parcel Value	1,914,700

BUILDING PERMIT RECORD

Permit Id	Issue Date	Type	Description	Amount	Insp Date	% Comp	Date Comp	Comments
BLDR-22-12	10-19-2022	804	Addn Alt-Res	100,000	06-01-2023	100	06-30-2023	Add dormer additions to front a
200805496	10-23-2008	AD	Addition	150,000	07-31-2009	100	06-30-2009	
200805495	10-02-2008	SP	Swimming Pool	70,000	07-31-2009	100	06-30-2009	18X36 GUNITE
78746	08-23-2004	AD	Addition	15,000	06-14-2005	100	01-01-2005	
74581	02-06-2004	RE	Remodel	10,000	06-14-2005	100	01-01-2005	
B36889	07-01-1994	DW	Dwelling	350,000	01-15-1995	100	12-31-1995	MM 1.5 ST

VISIT / CHANGE HISTORY

Date	Id	Type	Is	Cd	Purpost/Result
10-19-2023	JO	03		16	In Office Review
06-01-2023	SR	01		02	Bldg Permit Completed
12-07-2021	SR	01		03	Cycl Insp Comp
06-02-2020	DM			FR	Field Review
05-14-2015	JR	03		03	Cycl Insp Comp
12-06-2013	JR	03		16	In Office Review
12-07-2010	TP	03		16	In Office Review

LAND LINE VALUATION SECTION

B	Use Code	Description	Zone	LA	Land Units		Unit Price	Size Adj	AC Disc	Site Index	Cond.	Nbhd.	Nbhd. Adj	Notes	Location Adjustmen	Adj Unit P	Land Value
1	1010	Single Fam M-0	RF	3	1.000	AC	176,344.00	1.00000	1.0000	5	1.00	0111	3.050		1.0000	537,849.2	537,800
1	1010	Single Fam M-0	RF	3	1.000	AC	14,250.00	1.00000	1.0000	0	1.00	0111	3.050		1.0000	43,462.5	43,500
1	1010	Single Fam M-0	RF	3	3.080	AC	2,375.00	1.00000	1.0000	0	1.00	WTLD	1.000	WETLAND	1.0000	2,375	7,300

Total Card Land Units 5.08 AC | Parcel Total Land Area 5.08 | Total Land Value 588,600

Property Location 161 MARQUAND DRIVE | Map ID 077/ 037/ 004/ / | Bldg Name | State Use 1010
Vision ID 4679 | Account # 40119 | Bldg # 1 | Sec # 1 of 1 | Card # 1 of 2 | Print Date 1/30/2024 9:29:23 PM

CONSTRUCTION DETAIL

Element	Cd	Description
Style	04	Cape Cod
Model	01	Residential
Grade:	B	Custom
Stories	1.5	1 1/2 Stories
Exterior Wall 1	14	Wood Shingle
Exterior Wall 2		
Roof Structure	03	Gable/Hip
Roof Cover	03	Asph/F Gls/Cmp
Interior Wall 1	03	Plastered
Interior Wall 2		
Interior Floor 1	14	Carpet
Interior Floor 2	12	Hardwood
Heat Fuel	03	Gas
Heat Type	04	Hot Air
AC Type	03	Central
Bedrooms	05	5 Bedrooms
Full Baths	3	
Half Baths	2	
Extra Fixtures		
Total Rooms	10	10 Rooms
Bath Style		
Kitchen Style		
Occupancy		
Usrfld 105		
Accessory Apt		
Foundation Alt	01	Poured Conc.
Rms Prts		
Bath Split	32	3 Full-2 Half

CONSTRUCTION DETAIL (CONTINUED)

Element	Cd	Description

CONDO DATA

Parcel Id		C		Owne	0.0
		B		S	

Adjust Type	Code	Description	Factor%
Condo Flr			
Condo Unit			

COST / MARKET VALUATION

Building Value New	1,289,630
Year Built	1994
Effective Year Built	2003
Depreciation Code	A
Remodel Rating	
Year Remodeled	
Depreciation %	12
Functional Obsol	0
External Obsol	0
Trend Factor	1
Condition	
Condition %	
Percent Good	88
RCNLD	1,134,900
Dep % Ovr	
Dep Ovr Comment	
Misc Imp Ovr	
Misc Imp Ovr Comment	
Cost to Cure Ovr	
Cost to Cure Ovr Comment	

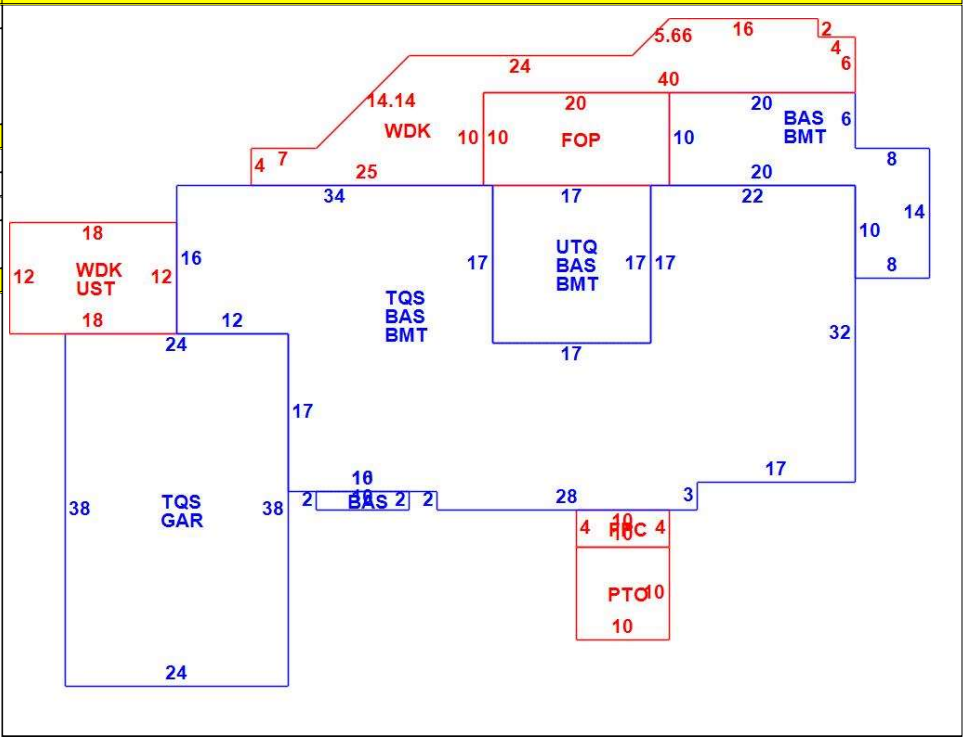

OB - OUTBUILDING & YARD ITEMS(L) / XF - BUILDING EXTRA FEATURES(B)

Code	Description	L/B	Units	Unit Price	Yr Blt	Cond. Cd	% Gd	Grade	Grade Adj.	Appr. Value
FPL3	Fireplace 2 sto	B	1	7000.00	2005		88		0.00	6,200
DKPA	Pond Dock-Av	L	1	32500.00	2003		68		0.00	22,100
SPL3	Pool Gunite	L	648	75.00	2008		78	00	1.00	39,800
WDC	Wood Decking	L	216	19.50	2010		82	C	0.00	4,000
WDC	Wood Decking	L	470	19.50	2007		76	C	0.00	6,600
FOPC	Open Prch-roo	B	40	47.85	2003		100	B	0.00	2,100
GAR	Attached Gara	B	912	32.74	2003		100	B	0.00	23,600
UST	Utility Storage-	B	216	13.30	2003		88		0.00	1,700
BMT	Basement-Unfi	B	2,556	27.42	2003		100		0.00	57,400
FOP	Open Porch-ro	B	200	55.00	2003		88		0.00	7,900

BUILDING SUB-AREA SUMMARY SECTION

Code	Description	Living Area	Floor Area	Eff Area	Unit Cost	Undeprec Value
BAS	First Floor	2,576	2,576	2,576	281.04	723,962
BMT	Basement Area	0	2,556	0	0.00	0
FOP	Open Porch	0	200	0	0.00	0
FPC	Open Porch Conc. Floor	0	40	0	0.00	0
GAR	Attached Garage	0	912	0	0.00	0
PTO	Patio	0	100	0	0.00	0
TQS	Three Quarter Story	1,864	2,867	1,864	182.72	523,861
UST	Utility Enclosure	0	216	0	0.00	0
UTQ	Unfinished Three-quarter story	0	289	145	141.01	40,751
WDK	Wood Deck	0	686	0	0.00	0
	Ttl Gross Liv / Lease Area	4,440	10,442	4,585		1,288,574

Property Location 161 MARQUAND DRIVE | Map ID 077/ 037/ 004/ / | Bldg Name | State Use 1010
Vision ID 4679 | Account # 40119 | Bldg # 1 | Sec # 1 of 1 | Card # 2 of 2 | Print Date 1/30/2024 9:29:23 PM

CURRENT OWNER

COTTON, JOHN B JR & ANN MARIE

PO BOX 68

OSTERVILLE MA 02655

TOPO		UTILITIES		STRT / ROAD		LOCATION	
3	Below Street	2	Public Water	1	Paved	1	Marginal View
		4	Gas				
		6	Septic				

SUPPLEMENTAL DATA

Alt Prcl ID		Plan Ref.	567/57
Split Zonin		Land Ct#	23111-B (SH 2)
BID Parcel		#SR	
ResExpt Q	YES:	Life Estate	
#DL 1	LOT 4	PP STATU	
#DL 2			
GIS ID	F_954318_2699370	Assoc Pid#	

CURRENT ASSESSMENT

Description	Code	Assessed	Assessed
RESIDNTL	1010	1,326,100	1,326,100
RES LAND	1010	588,600	588,600
	Total	1,914,700	1,914,700

801

FY2024
BARNSTABLE, MA

VISION

RECORD OF OWNERSHIP

BK-VOL/PAGE		SALE DATE	Q/U	V/I	SALE PRIC	VC

PREVIOUS ASSESSMENTS (HISTORY)

Year	Code	Assessed	Year	Code	Assessed V	Year	Code	Assessed
2023	1010	1,174,600	2022	1010	969,900	2021	1010	761,100
	1010	696,800		1010	406,400		1010	432,900
							1010	76,900
	Total	1,871,400		Total	1,376,300		Total	1,270,900

EXEMPTIONS

Year	Code	Description	Amount
		Total	

OTHER ASSESSMENTS

Code	Description	Number	Amount	Comm Int

This signature acknowledges a visit by a Data Collector or Assessor

ASSESSING NEIGHBORHOOD

Nbhd	Nbhd Name	B	Tracing	Batch
0111				MARSTM

NOTES

APPRAISED VALUE SUMMARY

Appraised Bldg. Value (Card)	1,134,900
Appraised Xf (B) Value (Bldg)	101,100
Appraised Ob (B) Value (Bldg)	90,100
Appraised Land Value (Bldg)	588,600
Special Land Value	0
Total Appraised Parcel Value	1,914,700
Valuation Method	C
Total Appraised Parcel Value	1,914,700

BUILDING PERMIT RECORD

Permit Id	Issue Date	Type	Description	Amount	Insp Date	% Comp	Date Comp	Comments

VISIT / CHANGE HISTORY

Date	Id	Type	Is	Cd	Purpost/Result

LAND LINE VALUATION SECTION

B	Use Code	Description	Zone	LA	Land Units		Unit Price	Size Adj	AC Disc	Site Index	Cond.	Nbhd.	Nbhd. Adj	Notes	Location Adjustmen		Adj Unit P	Land Value

Total Card Land Units | Parcel Total Land Area | Total Land Value

Property Location 161 MARQUAND DRIVE | Map ID 077/ 037/ 004/ / | Bldg Name | State Use 1010
Vision ID 4679 | Account # 40119 | Bldg # 1 | Sec # 1 of 1 | Card # 2 of 2 | Print Date 1/30/2024 9:29:24 PM

CONSTRUCTION DETAIL

Element	Cd	Description
Style	04	Cape Cod
Model	01	Residential
Grade:	B	Custom
Stories	1.5	1 1/2 Stories
Exterior Wall 1	14	Wood Shingle
Exterior Wall 2		
Roof Structure	03	Gable/Hip
Roof Cover	03	Asph/F Gls/Cmp
Interior Wall 1	03	Plastered
Interior Wall 2		
Interior Floor 1	14	Carpet
Interior Floor 2	12	Hardwood
Heat Fuel	03	Gas
Heat Type	04	Hot Air
AC Type	03	Central
Bedrooms	05	5 Bedrooms
Full Baths	3	
Half Baths	2	
Extra Fixtures		
Total Rooms	10	10 Rooms
Bath Style		
Kitchen Style		
Occupancy		
Usrfld 105		
Accessory Apt		
Foundation Alt	01	Poured Conc.
Rms Prts		
Bath Split	32	3 Full-2 Half

CONSTRUCTION DETAIL (CONTINUED)

Element	Cd	Description

CONDO DATA

Parcel Id		C		Owne	0.0
		B		S	

Adjust Type	Code	Description	Factor%
Condo Flr			
Condo Unit			

COST / MARKET VALUATION

Building Value New	
Year Built	
Effective Year Built	
Depreciation Code	
Remodel Rating	
Year Remodeled	
Depreciation %	
Functional Obsol	
External Obsol	
Trend Factor	
Condition	
Condition %	
Percent Good	
RCNLD	
Dep % Ovr	
Dep Ovr Comment	
Misc Imp Ovr	
Misc Imp Ovr Comment	
Cost to Cure Ovr	
Cost to Cure Ovr Comment	

OB - OUTBUILDING & YARD ITEMS(L) / XF - BUILDING EXTRA FEATURES(B)

Code	Description	L/B	Units	Unit Price	Yr Blt	Cond. Cd	% Gd	Grade	Grade Adj.	Appr. Value
PATF	Flagstone Pav	L	100	30.00	1997		78		0.00	2,800
GEN	Emergency Ge	L	1	5550.00	2021		100		0.00	5,600
PAT1	Patio- Average	L	912	5.89	2008		89		0.00	4,300
SPDC	POOL DECK	L	912	5.61	2008		89		0.00	4,600
FPLG	Gas Fireplace-	B	1	2500.00	2003		88		0.00	2,200
SHED	Shed	L	24	18.00	2008		78		0.00	300

BUILDING SUB-AREA SUMMARY SECTION

Code	Description	Living Area	Floor Area	Eff Area	Unit Cost	Undeprec Value
	Ttl Gross Liv / Lease Area					