Property Location 88 LOVELL'S LANE | Map ID 078/ 039/ / / | Bldg Name | State Use 1010
Vision ID 4744 | Account # 40645 | Bldg # 1 | Sec # 1 of 1 | Card # 1 of 1 | Print Date 1/30/2024 9:36:52 PM

CURRENT OWNER

MILLER, VICTOR

88 LOVELL'S LANE

MARSTONS MIL MA 02648

TOPO / UTILITIES / STRT / ROAD / LOCATION

SUPPLEMENTAL DATA

Alt Prcl ID	Plan Ref.
Split Zonin	Land Ct#
BID Parcel	#SR
ResExpt Q YES:	Life Estate
#DL 1	PP STATU
#DL 2	
GIS ID F_954401_2701448	Assoc Pid#

CURRENT ASSESSMENT

Description	Code	Assessed	Assessed
RESIDNTL	1010	451,700	451,700
RES LAND	1010	162,100	162,100
Total		613,800	613,800

801

FY2024
BARNSTABLE, MA

VISION

RECORD OF OWNERSHIP

	BK-VOL/PAGE		SALE DATE	Q/U	V/I	SALE PRIC	VC
MILLER, VICTOR	9095	0047	03-15-1994	Q	I	80,000	U
GIFFORD, HAROLD I	0883	0532	08-24-1954	U		0	

PREVIOUS ASSESSMENTS (HISTORY)

Year	Code	Assessed	Year	Code	Assessed V	Year	Code	Assessed
2023	1010	408,000	2022	1010	345,200	2021	1010	297,000
	1010	147,300		1010	109,100		1010	109,100
							1010	3,800
	Total	555,300		Total	454,300		Total	409,900

EXEMPTIONS

Year	Code	Description	Amount
2019	5C	RESIDENTIAL EXEMPTION	0.00
		Total	0.00

OTHER ASSESSMENTS

Code	Description	Number	Amount	Comm Int

This signature acknowledges a visit by a Data Collector or Assessor

ASSESSING NEIGHBORHOOD

Nbhd	Nbhd Name	B	Tracing	Batch
0105				MARSTM

NOTES

APPRAISED VALUE SUMMARY

Appraised Bldg. Value (Card)	389,300
Appraised Xf (B) Value (Bldg)	58,600
Appraised Ob (B) Value (Bldg)	3,800
Appraised Land Value (Bldg)	162,100
Special Land Value	0
Total Appraised Parcel Value	613,800
Valuation Method	C
Total Appraised Parcel Value	613,800

BUILDING PERMIT RECORD

Permit Id	Issue Date	Type	Description	Amount	Insp Date	% Comp	Date Comp	Comments
18-1333	05-21-2018	822	Insulation	3,639	06-30-2018	100	06-30-2018	Weatherization
70697	08-08-2003	AD	Addition	50,000	06-02-2005	100	06-30-2007	
20644	01-22-1997	RE	Remodel	15,000	06-01-1999	100	12-31-1997	

VISIT / CHANGE HISTORY

Date	Id	Type	Is	Cd	Purpost/Result
05-12-2020	LS			FR	Field Review
07-03-2019	CK	22		22	Change of Address
05-31-2019	SR	01		03	Cycl Insp Comp
04-03-2019	JD	03		16	In Office Review
04-03-2014	JR	03		16	In Office Review
06-19-2006	JR	03		16	In Office Review

LAND LINE VALUATION SECTION

B	Use Code	Description	Zone	LA	Land Units		Unit Price	Size Adj	AC Disc	Site Index	Cond.	Nbhd.	Nbhd. Adj	Notes	Location Adjustmen	Adj Unit P	Land Value
1	1010	Single Fam M-0	RF	3	0.560	AC	176,344.00	1.64114	1.0000	5	1.00	0105	1.000		1.0000	289,398.1	162,100

Total Card Land Units 0.56 AC | Parcel Total Land Area 0.56 | Total Land Value 162,100

Property Location 88 LOVELL'S LANE | Map ID 078/ 039/ / / | Bldg Name | State Use 1010
Vision ID 4744 | Account # 40645 | Bldg # 1 | Sec # 1 of 1 | Card # 1 of 1 | Print Date 1/30/2024 9:36:53 PM

CONSTRUCTION DETAIL

Element	Cd	Description
Style	04	Cape Cod
Model	01	Residential
Grade:	C	Average
Stories	1.75	1 3/4 Stories
Exterior Wall 1	12	Cedar or Redwd
Exterior Wall 2		
Roof Structure	03	Gable/Hip
Roof Cover	03	Asph/F Gls/Cmp
Interior Wall 1	05	Drywall
Interior Wall 2		
Interior Floor 1	12	Hardwood
Interior Floor 2		
Heat Fuel	02	Oil
Heat Type	05	Hot Water
AC Type	01	None
Bedrooms	04	4 Bedrooms
Full Baths	2	
Half Baths	0	
Extra Fixtures		
Total Rooms	7	7 Rooms
Bath Style		
Kitchen Style		
Occupancy		
Usrfld 105		
Accessory Apt		
Foundation Alt	02	Conc. Block
Rms Prts		
Bath Split	20	2 Full-0 Half

CONSTRUCTION DETAIL (CONTINUED)

Element	Cd	Description

CONDO DATA

Parcel Id		C		Owne	0.0
		B		S	

Adjust Type	Code	Description	Factor%
Condo Flr			
Condo Unit			

COST / MARKET VALUATION

Building Value New	548,243
Year Built	1953
Effective Year Built	1982
Depreciation Code	A
Remodel Rating	
Year Remodeled	
Depreciation %	29
Functional Obsol	
External Obsol	
Trend Factor	1
Condition	
Condition %	
Percent Good	71
RCNLD	389,300
Dep % Ovr	
Dep Ovr Comment	
Misc Imp Ovr	
Misc Imp Ovr Comment	
Cost to Cure Ovr	
Cost to Cure Ovr Comment	

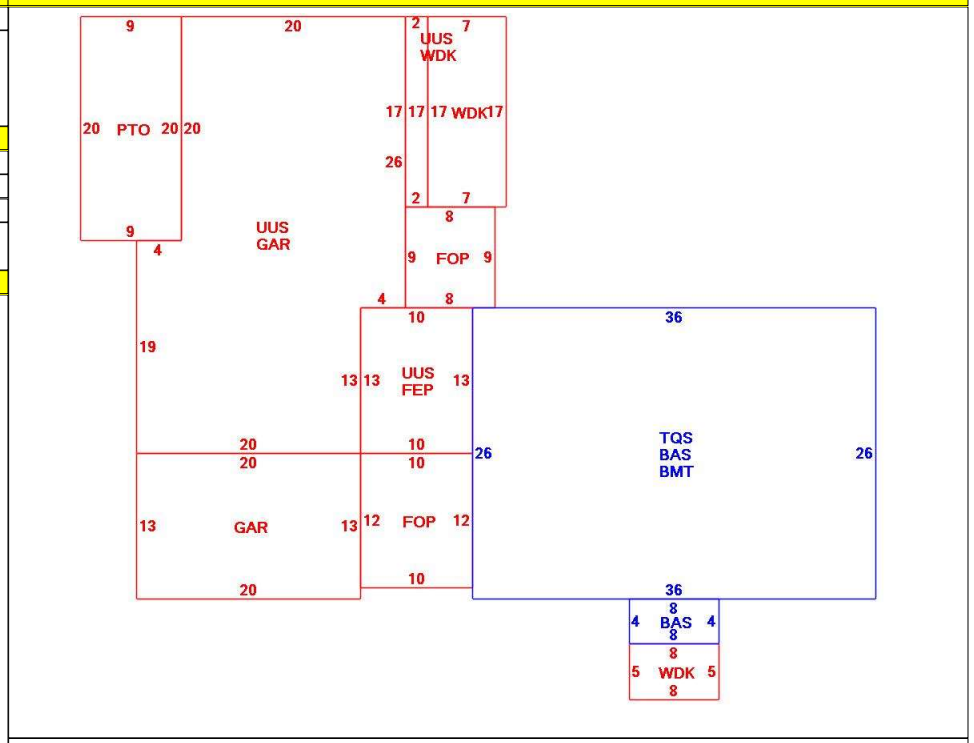

OB - OUTBUILDING & YARD ITEMS(L) / XF - BUILDING EXTRA FEATURES(B)

Code	Description	L/B	Units	Unit Price	Yr Blt	Cond. Cd	% Gd	Grade	Grade Adj.	Appr. Value
FPL2	Fireplace 1.5 s	B	1	6000.00	1984		71		0.00	4,300
WDC	Wood Decking	L	193	20.00	1991		44		0.00	2,000
PAT1	Patio- Average	L	180	5.89	1991		72		0.00	900
FOP	Open Porch-ro	B	192	55.00	1984		71		0.00	6,200
FEP	Enclosed porc	B	130	70.00	1984		71		0.00	6,900
GAR	Attached Gara	B	1,064	40.00	1984		71		0.00	23,200
BMT	Basement-Unfi	B	936	26.01	1984		71		0.00	18,000
SHED	Shed	L	96	18.00	1994		50		0.00	900

BUILDING SUB-AREA SUMMARY SECTION

Code	Description	Living Area	Floor Area	Eff Area	Unit Cost	Undeprec Value
BAS	First Floor	968	968	968	228.53	221,217
BMT	Basement Area	0	936	0	0.00	0
FEP	Enclosed Porch	0	130	0	0.00	0
FOP	Open Porch	0	192	0	0.00	0
GAR	Attached Garage	0	1,064	0	0.00	0
PTO	Patio	0	180	0	0.00	0
TQS	Three Quarter Story	608	936	608	148.45	138,946
UUS	Upper Story, Unfinished	0	968	823	194.30	188,080
WDK	Wood Deck	0	193	0	0.00	0
	Ttl Gross Liv / Lease Area	1,576	5,567	2,399		548,243