Property Location 279 CAMMETT ROAD | Map ID 078/ 100/ / / | Bldg Name | State Use 1010
Vision ID 4811 | Account # 41216 | Bldg # 1 | Sec # 1 of 1 | Card # 1 of 1 | Print Date 1/30/2024 9:44:09 PM

CURRENT OWNER

GARLINGTON, SCOTT M TR

279 CAMMETT RD

MARSTONS MIL MA 02648

TOPO	UTILITIES	STRT / ROAD	LOCATION
1			

SUPPLEMENTAL DATA

Alt Prcl ID		Plan Ref.	161/37
Split Zonin		Land Ct#	
BID Parcel		#SR	
ResExpt Q	INFO:	Life Estate	
#DL 1	LOT 5	PP STATU	
#DL 2			
GIS ID	F_954818_2701060	Assoc Pid#	

CURRENT ASSESSMENT

Description	Code	Assessed	Assessed
RESIDNTL	1010	388,700	388,700
RES LAND	1010	156,800	156,800
Total		545,500	545,500

801

FY2024
BARNSTABLE, MA

VISION

RECORD OF OWNERSHIP

	BK-VOL/PAGE		SALE DATE	Q/U	V/I	SALE PRIC	VC
GARLINGTON, SCOTT M TR	18753	0051	06-24-2004	U	I	1	1F
GARLINGTON, SCOTT M	17424	0053	08-08-2003	U	I	1	1A
GARLINGTON, SCOTT M TR	15010	0348	04-03-2002	U	I	1	1F
GARLINGTON, SCOTT M	7405	0329	01-15-1991	U	I	1	1A
GARLINGTON, SCOTT M	3684	0121	03-15-1983	Q	I	44,000	00

PREVIOUS ASSESSMENTS (HISTORY)

Year	Code	Assessed	Year	Code	Assessed V	Year	Code	Assessed
2023	1010	348,900	2022	1010	292,900	2021	1010	241,000
	1010	142,600		1010	105,600		1010	105,600
							1010	11,700
	Total	491,500		Total	398,500		Total	358,300

EXEMPTIONS

Year	Code	Description	Amount
2024	N5C	NO RESIDENTIAL EXEMPTION	
		Total	0.00

OTHER ASSESSMENTS

Code	Description	Number	Amount	Comm Int

This signature acknowledges a visit by a Data Collector or Assessor

APPRAISED VALUE SUMMARY

Appraised Bldg. Value (Card)	347,500
Appraised Xf (B) Value (Bldg)	29,500
Appraised Ob (B) Value (Bldg)	11,700
Appraised Land Value (Bldg)	156,800
Special Land Value	0
Total Appraised Parcel Value	545,500
Valuation Method	C
Total Appraised Parcel Value	545,500

ASSESSING NEIGHBORHOOD

Nbhd	Nbhd Name	B	Tracing	Batch
0105				MARSTM

NOTES

BUILDING PERMIT RECORD

Permit Id	Issue Date	Type	Description	Amount	Insp Date	% Comp	Date Comp	Comments
76787	05-21-2004	AD	Addition	30,000	09-27-2004	100	01-01-2005	
B34132	01-01-1991	AD	Addition	40,000	01-15-1992	100	06-30-1992	MM ADD'N
B21727	10-01-1979	DW	Dwelling	0	01-15-1980	100	06-30-1980	MM 11/2 S

VISIT / CHANGE HISTORY

Date	Id	Type	Is	Cd	Purpost/Result
05-13-2020	LS			FR	Field Review
05-29-2019	SR	01		03	Cycl Insp Comp
07-09-2014	JR	03		16	In Office Review
08-31-2012	RB	03		16	In Office Review
12-05-2005	PT	02		01	Meas/Est
09-27-2004	MF	02		02	Bldg Permit Completed
01-15-1999	DD	01		00	Meas/Listed-Interior Acces

LAND LINE VALUATION SECTION

B	Use Code	Description	Zone	LA	Land Units		Unit Price	Size Adj	AC Disc	Site Index	Cond.	Nbhd.	Nbhd. Adj	Notes	Location Adjustmen	Adj Unit P	Land Value
1	1010	Single Fam M-0	RF	3	0.490	AC	176,344.00	1.81499	1.0000	5	1.00	0105	1.000		1.0000	320,064.3	156,800

Total Card Land Units 0.49 AC | Parcel Total Land Area 0.49 | Total Land Value 156,800

Property Location 279 CAMMETT ROAD | Map ID 078/ 100/ / / | Bldg Name | State Use 1010
Vision ID 4811 | Account # 41216 | Bldg # 1 | Sec # 1 of 1 | Card # 1 of 1 | Print Date 1/30/2024 9:44:09 PM

CONSTRUCTION DETAIL

Element	Cd	Description
Style	04	Cape Cod
Model	01	Residential
Grade:	C	Average
Stories	1.5	1 1/2 Stories
Exterior Wall 1	14	Wood Shingle
Exterior Wall 2		
Roof Structure	11	Bowstring Trus
Roof Cover	03	Asph/F Gls/Cmp
Interior Wall 1	05	Drywall
Interior Wall 2		
Interior Floor 1	14	Carpet
Interior Floor 2	12	Hardwood
Heat Fuel	07	Mixed
Heat Type	05	Hot Water
AC Type	01	None
Bedrooms	03	3 Bedrooms
Full Baths	2	
Half Baths	1	
Extra Fixtures		
Total Rooms	6	
Bath Style		
Kitchen Style		
Occupancy		
Usrfld 105		
Accessory Apt		
Foundation Alt	08	Mixed
Rms Prts		
Bath Split	21	2 Full-1 Half

CONSTRUCTION DETAIL (CONTINUED)

Element	Cd	Description

CONDO DATA

Parcel Id		C		Owne	0.0
		B		S	

Adjust Type	Code	Description	Factor%
Condo Flr			
Condo Unit			

COST / MARKET VALUATION

Building Value New	429,005
Year Built	1979
Effective Year Built	1995
Depreciation Code	A
Remodel Rating	
Year Remodeled	
Depreciation %	19
Functional Obsol	0
External Obsol	0
Trend Factor	1
Condition	
Condition %	
Percent Good	81
RCNLD	347,500
Dep % Ovr	
Dep Ovr Comment	
Misc Imp Ovr	
Misc Imp Ovr Comment	
Cost to Cure Ovr	
Cost to Cure Ovr Comment	

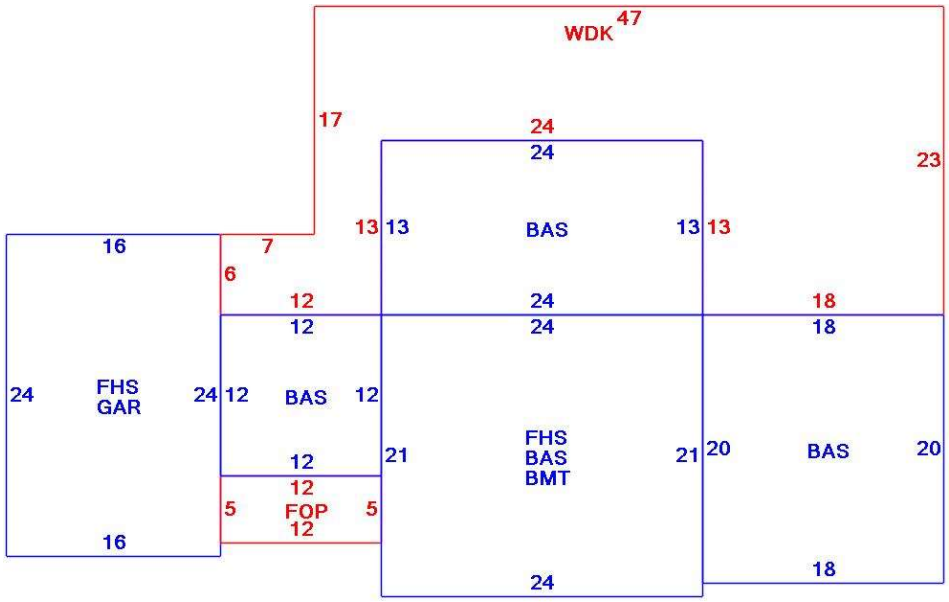

OB - OUTBUILDING & YARD ITEMS(L) / XF - BUILDING EXTRA FEATURES(B)

Code	Description	L/B	Units	Unit Price	Yr Blt	Cond. Cd	% Gd	Grade	Grade Adj.	Appr. Value
WDC	Wood Decking	L	811	20.00	2003		68		0.00	10,000
FOP	Open Porch-ro	B	60	55.00	1997		81		0.00	3,100
GAR	Attached Gara	B	384	40.00	1997		81		0.00	12,700
BMT	Basement-Unfi	B	504	26.01	1997		81		0.00	13,700
SHD2	Shed w/Elec	L	120	26.00	1996		54		0.00	1,700

BUILDING SUB-AREA SUMMARY SECTION

Code	Description	Living Area	Floor Area	Eff Area	Unit Cost	Undeprec Value
BAS	First Floor	1,320	1,320	1,320	243.20	321,024
BMT	Basement Area	0	504	0	0.00	0
FHS	Half Story	444	888	444	121.60	107,981
FOP	Open Porch	0	60	0	0.00	0
GAR	Attached Garage	0	384	0	0.00	0
WDK	Wood Deck	0	811	0	0.00	0
	Ttl Gross Liv / Lease Area	1,764	3,967	1,764		429,005