Property Location 256 MISTIC DRIVE | Map ID 080/ 013/ / / | Bldg Name | State Use 1010
Vision ID 4914 | Account # 42215 | Bldg # 1 | Sec # 1 of 1 | Card # 1 of 1 | Print Date 1/30/2024 9:55:58 PM

CURRENT OWNER

CREMONA, ANNA P TR
ANNA CREMONA 2000 REV LIVING T
PO BOX 670
MARSTONS MIL MA 02648

TOPO		UTILITIES		STRT / ROAD		LOCATION	
4	Rolling	6	Septic	1	Paved	1	Lake/Pond Fro
		4	Gas				
		2	Public Water				

SUPPLEMENTAL DATA

Alt Prcl ID		Plan Ref.	203/53
Split Zonin		Land Ct#	
BID Parcel		#SR	
ResExpt Q	YES:	Life Estate	
#DL 1	LOT 15	PP STATU	
#DL 2			
GIS ID	F_953012_2704930	Assoc Pid#	

CURRENT ASSESSMENT

Description	Code	Assessed	Assessed
RESIDNTL	1010	746,700	746,700
RES LAND	1010	545,200	545,200
Total		1,291,900	1,291,900

801
FY2024
BARNSTABLE, MA

VISION

RECORD OF OWNERSHIP

	BK-VOL/PAGE		SALE DATE	Q/U	V/I	SALE PRIC	VC
CREMONA, ANNA P TR	20641	0282	01-10-2006	U	I	1	1A
CREMONA, VINCENT M & ANNA P	18975	0158	08-27-2004	Q	I	1,090,000	00
TIMSON, BETH ANN TR	10207	0319	05-17-1996	U	I	420,000	P
TSANDIKOS, GEORGE M	9340	0301	08-29-1994	Q	V	145,000	U
SKAPARS, AURELIUS V & YVONNE V	7299	0134	09-21-1990	U	V	165,000	L

PREVIOUS ASSESSMENTS (HISTORY)

Year	Code	Assessed	Year	Code	Assessed V	Year	Code	Assessed
2023	1010	586,100	2022	1010	542,400	2021	1010	455,700
	1010	642,800		1010	363,600		1010	387,800
							1010	18,600
	Total	1,228,900		Total	906,000		Total	862,100

EXEMPTIONS

Year	Code	Description	Amount
2024	5C	RESIDENTIAL EXEMPTION	
		Total	0.00

OTHER ASSESSMENTS

Code	Description	Number	Amount	Comm Int

This signature acknowledges a visit by a Data Collector or Assessor

ASSESSING NEIGHBORHOOD

Nbhd	Nbhd Name	B	Tracing	Batch
0111				MARSTM

NOTES

APPRAISED VALUE SUMMARY

Appraised Bldg. Value (Card)	656,900
Appraised Xf (B) Value (Bldg)	71,200
Appraised Ob (B) Value (Bldg)	18,600
Appraised Land Value (Bldg)	545,200
Special Land Value	0
Total Appraised Parcel Value	1,291,900
Valuation Method	C
Total Appraised Parcel Value	1,291,900

BUILDING PERMIT RECORD

Permit Id	Issue Date	Type	Description	Amount	Insp Date	% Comp	Date Comp	Comments
B37109	10-01-1994	DW	Dwelling	160,000	01-15-1996	100	12-31-1996	MM 2 STOR

VISIT / CHANGE HISTORY

Date	Id	Type	Is	Cd	Purpost/Result
07-11-2023	JO	03		16	In Office Review
05-12-2020	LS			FR	Field Review
07-12-2018	SR	01		03	Cycl Insp Comp
02-22-2011	MA	22		22	Change of Address
02-02-2006	PT	02		01	Meas/Est
10-21-2004	PT	02		01	Meas/Est
06-22-1999	MF	01		00	Meas/Listed-Interior Acces

LAND LINE VALUATION SECTION

B	Use Code	Description	Zone	LA	Land Units		Unit Price	Size Adj	AC Disc	Site Index	Cond.	Nbhd.	Nbhd. Adj	Notes	Location Adjustmen	Adj Unit P	Land Value
1	1010	Single Fam M-0	RF	3	1.000	AC	176,344.00	1.00000	1.0000	5	1.00	0111	3.050	HAMBLIN POND	1.0000	537,849.2	537,800
1	1010	Single Fam M-0	RF	3	0.170	AC	14,250.00	1.00000	1.0000	0	1.00	0111	3.050		1.0000	43,462.5	7,400

Total Card Land Units 1.17 AC | Parcel Total Land Area 1.17 | Total Land Value 545,200

Property Location 256 MISTIC DRIVE | Map ID 080/ 013/ / / | Bldg Name | State Use 1010
Vision ID 4914 | Account # 42215 | Bldg # 1 | Sec # 1 of 1 | Card # 1 of 1 | Print Date 1/30/2024 9:55:59 PM

CONSTRUCTION DETAIL

Element	Cd	Description
Style	07	Modern/Contemp
Model	01	Residential
Grade:	C+	Average Plus
Stories	2	2 Stories
Exterior Wall 1	14	Wood Shingle
Exterior Wall 2	11	Clapboard
Roof Structure	03	Gable/Hip
Roof Cover	03	Asph/F Gls/Cmp
Interior Wall 1	03	Plastered
Interior Wall 2		
Interior Floor 1	12	Hardwood
Interior Floor 2	14	Carpet
Heat Fuel	03	Gas
Heat Type	04	Hot Air
AC Type	03	Central
Bedrooms	04	4 Bedrooms
Full Baths	2	
Half Baths	1	
Extra Fixtures		
Total Rooms	8	8 Rooms
Bath Style		
Kitchen Style		
Occupancy		
Usrfld 105		
Accessory Apt		
Foundation Alt	01	Poured Conc.
Rms Prts		
Bath Split	21	2 Full-1 Half

CONSTRUCTION DETAIL (CONTINUED)

Element	Cd	Description

CONDO DATA

Parcel Id		C		Owne	0.0
		B		S	

Adjust Type	Code	Description	Factor%
Condo Flr			
Condo Unit			

COST / MARKET VALUATION

Building Value New	746,508
Year Built	1995
Effective Year Built	2003
Depreciation Code	A
Remodel Rating	
Year Remodeled	
Depreciation %	12
Functional Obsol	0
External Obsol	0
Trend Factor	1
Condition	
Condition %	
Percent Good	88
RCNLD	656,900
Dep % Ovr	
Dep Ovr Comment	
Misc Imp Ovr	
Misc Imp Ovr Comment	
Cost to Cure Ovr	
Cost to Cure Ovr Comment	

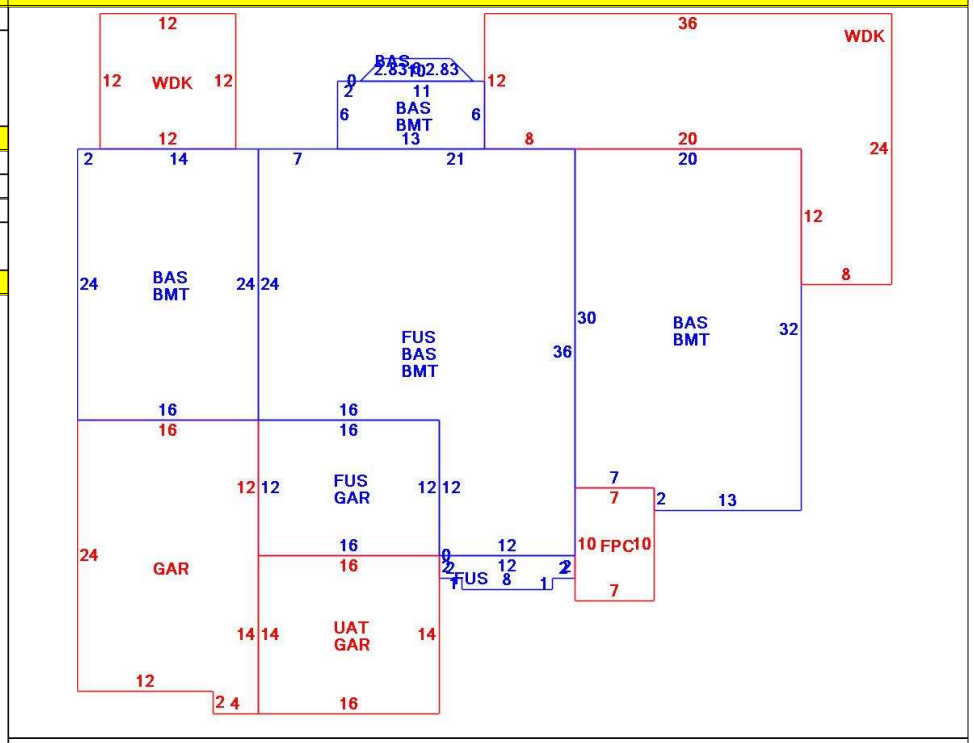

OB - OUTBUILDING & YARD ITEMS(L) / XF - BUILDING EXTRA FEATURES(B)

Code	Description	L/B	Units	Unit Price	Yr Blt	Cond. Cd	% Gd	Grade	Grade Adj.	Appr. Value
FPL2	Fireplace 1.5 s	B	1	6000.00	2005		88		0.00	5,300
FPO	Ext FP Openin	B	1	2000.00	2005		88		0.00	1,800
WDC	Wood Decking	L	672	20.00	2003		68		0.00	8,400
FOPC	Open Prch-roo	B	70	55.00	2005		88		0.00	3,200
GAR	Attached Gara	B	808	40.00	2005		88		0.00	23,100
BMT	Basement-Unfi	B	1,904	26.01	2005		88		0.00	37,800
SHD2	Shed w/Elec	L	96	26.00	2017		96		0.00	2,400
STRS	Stairs to Water	L	21	122.52	2017		96	C	1.00	2,500
GEN	Emergency Ge	L	1	5550.00	2017		96		0.00	5,300

BUILDING SUB-AREA SUMMARY SECTION

Code	Description	Living Area	Floor Area	Eff Area	Unit Cost	Undeprec Value
BAS	First Floor	1,920	1,920	1,920	250.34	480,649
BMT	Basement Area	0	1,904	0	0.00	0
FPC	Open Porch Conc. Floor	0	70	0	0.00	0
FUS	Upper Story	1,040	1,040	1,040	250.34	260,352
GAR	Attached Garage	0	808	0	0.00	0
UAT	Attic, Unfinished	0	224	22	24.59	5,507
WDK	Wood Deck	0	672	0	0.00	0
	Ttl Gross Liv / Lease Area	2,960	6,638	2,982		746,508