Property Location 23 MIDDLE POND PATH | Map ID 080/ 020/ / / | Bldg Name | State Use 1010
Vision ID 4921 | Account # 42288 | Bldg # 1 | Sec # 1 of 1 | Card # 1 of 2 | Print Date 1/30/2024 9:56:47 PM

CURRENT OWNER

THEOHARIDIS, ALEXANDRE & TAYL
THEOHARIDIS REALTY TRUST
23 MIDDLE POND PATH

MARSTONS MIL MA 02648

TOPO		UTILITIES		STRT / ROAD		LOCATION	
1	Level	2	Public Water	1	Paved		
		4	Gas				
		6	Septic				

SUPPLEMENTAL DATA

Alt Prcl ID		Plan Ref.	203/53
Split Zonin		Land Ct#	
BID Parcel		#SR	
ResExpt Q	NO APP:	Life Estate	
#DL 1	LOT 40	PP STATU	
#DL 2			
GIS ID	F_952558_2705132	Assoc Pid#	

CURRENT ASSESSMENT

Description	Code	Assessed	Assessed
RESIDNTL	1010	767,800	767,800
RES LAND	1010	247,300	247,300
	Total	1,015,100	1,015,100

801
FY2024
BARNSTABLE, MA

VISION

RECORD OF OWNERSHIP

	BK-VOL/PAGE		SALE DATE	Q/U	V/I	SALE PRIC	VC
THEOHARIDIS, ALEXANDRE & TAYLOR	32190	0168	07-31-2019	U	I	1	1F
THEOHARIDIS, ALEXANDRE & TAYLOR	31864	0334	03-01-2019	Q	I	630,000	00
BURKE, ELLEN J	31587	0253	10-11-2018	U	I	10	1F
BURKE, WALTER L & ELLEN J	27773	0004	10-22-2013	Q	I	610,000	00
LOVELY, CHRISTOPHER L	13816	0337	05-10-2001	U	I	100	1

PREVIOUS ASSESSMENTS (HISTORY)

Year	Code	Assessed	Year	Code	Assessed V	Year	Code	Assessed
2023	1010	694,100	2022	1010	590,500	2021	1010	490,300
	1010	224,800		1010	154,800		1010	157,200
							1010	26,000
	Total	918,900		Total	745,300		Total	673,500

EXEMPTIONS

Year	Code	Description	Amount
2021	N5C	NO RESIDENTIAL EXEMPTION	0.00
		Total	0.00

OTHER ASSESSMENTS

Code	Description	Number	Amount	Comm Int

This signature acknowledges a visit by a Data Collector or Assessor

ASSESSING NEIGHBORHOOD

Nbhd	Nbhd Name	B	Tracing	Batch
0108				MARSTM

NOTES

APPRAISED VALUE SUMMARY

Appraised Bldg. Value (Card)	643,700
Appraised Xf (B) Value (Bldg)	98,100
Appraised Ob (B) Value (Bldg)	26,000
Appraised Land Value (Bldg)	247,300
Special Land Value	0
Total Appraised Parcel Value	1,015,100
Valuation Method	C
Total Appraised Parcel Value	1,015,100

BUILDING PERMIT RECORD

Permit Id	Issue Date	Type	Description	Amount	Insp Date	% Comp	Date Comp	Comments
201408439	12-11-2014	IN	Insulation	2,500	06-30-2015	100	06-30-2016	INSUALATION/WEATHERIZA
63330	08-27-2002	RA	Remodel-Additi	28,000	12-19-2002	100	01-01-2003	
32358	07-27-1998	NR	New Roof	8,000	06-01-1999	100	12-31-1999	
B33162	08-01-1989	SP	Swimming Pool	10,000	01-15-1990	100	12-31-1990	MM SW.POO
B32990	06-01-1989	DW	Dwelling	90,000	01-15-1990	100	12-31-1990	MM 11/2 S

VISIT / CHANGE HISTORY

Date	Id	Type	Is	Cd	Purpost/Result
05-12-2020	LS			FR	Field Review
01-09-2020	CK	03		16	In Office Review
07-11-2018	SR	02		03	Cycl Insp Comp
01-08-2016	GC	03		16	In Office Review
05-05-2015	JR	03		03	Cycl Insp Comp
02-01-2006	PT	01		00	Meas/Listed-Interior Acces
12-19-2002	MF	02		02	Bldg Permit Completed

LAND LINE VALUATION SECTION

B	Use Code	Description	Zone	LA	Land Units		Unit Price	Size Adj	AC Disc	Site Index	Cond.	Nbhd.	Nbhd. Adj	Notes	Location Adjustmen	Adj Unit P	Land Value
1	1010	Single Fam M-0	RF	3	1.000	AC	176,344.00	1.00000	1.0000	5	1.00	0107	1.400		1.0000	246,881.6	246,900
1	1010	Single Fam M-0	RF	3	0.020	AC	14,250.00	1.00000	1.0000	0	1.00	0107	1.400		1.0000	19,950	400

Total Card Land Units 1.02 AC | Parcel Total Land Area 1.02 | Total Land Value 247,300

Property Location 23 MIDDLE POND PATH | Map ID 080/ 020/ / / | Bldg Name | State Use 1010
Vision ID 4921 | Account # 42288 | Bldg # 1 | Sec # 1 of 1 | Card # 1 of 2 | Print Date 1/30/2024 9:56:48 PM

CONSTRUCTION DETAIL

Element	Cd	Description
Style	04	Cape Cod
Model	01	Residential
Grade:	C+	Average Plus
Stories	1.5	1 1/2 Stories
Exterior Wall 1	14	Wood Shingle
Exterior Wall 2	11	Clapboard
Roof Structure	03	Gable/Hip
Roof Cover	03	Asph/F Gls/Cmp
Interior Wall 1	03	Plastered
Interior Wall 2	05	Drywall
Interior Floor 1	14	Carpet
Interior Floor 2	12	Hardwood
Heat Fuel	03	Gas
Heat Type	05	Hot Water
AC Type	03	Central
Bedrooms	04	4 Bedrooms
Full Baths	3	
Half Baths	1	
Extra Fixtures		
Total Rooms	10	10 Rooms
Bath Style		
Kitchen Style		
Occupancy		
Usrfld 105		
Accessory Apt		
Foundation Alt	01	Poured Conc.
Rms Prts		
Bath Split	31	3 Full-1 Half

CONSTRUCTION DETAIL (CONTINUED)

Element	Cd	Description

CONDO DATA

Parcel Id		C		Owne	0.0
		B		S	

Adjust Type	Code	Description	Factor%
Condo Flr			
Condo Unit			

COST / MARKET VALUATION

Building Value New	757,249
Year Built	1989
Effective Year Built	2000
Depreciation Code	A
Remodel Rating	
Year Remodeled	
Depreciation %	15
Functional Obsol	0
External Obsol	0
Trend Factor	1
Condition	
Condition %	
Percent Good	85
RCNLD	643,700
Dep % Ovr	
Dep Ovr Comment	
Misc Imp Ovr	
Misc Imp Ovr Comment	
Cost to Cure Ovr	
Cost to Cure Ovr Comment	

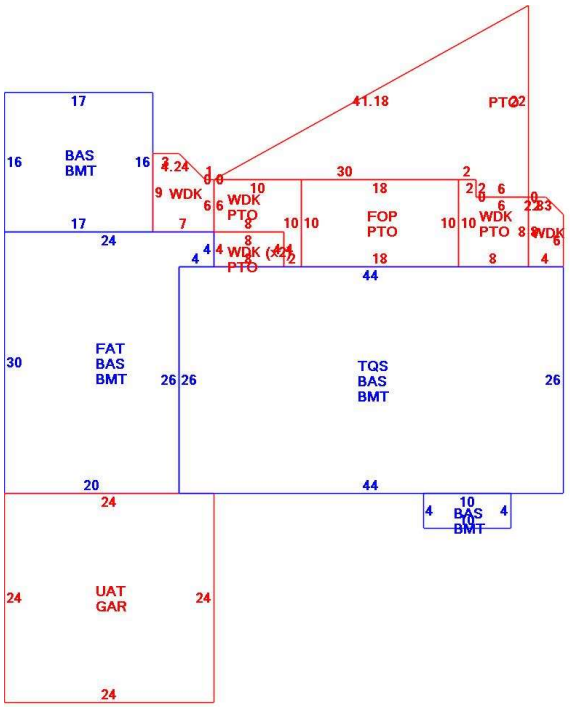

OB - OUTBUILDING & YARD ITEMS(L) / XF - BUILDING EXTRA FEATURES(B)

Code	Description	L/B	Units	Unit Price	Yr Blt	Cond. Cd	% Gd	Grade	Grade Adj.	Appr. Value
FPL2	Fireplace 1.5 s	B	1	6000.00	2002		85		0.00	5,100
SPL2	Pool Vinyl	L	648	55.00	1989		40	00	1.00	13,700
BFA1	Bsmt Fin-Goo	B	1,040	32.56	2002		85		0.00	28,800
FPO	Ext FP Openin	B	1	2000.00	2002		85		0.00	1,700
WDC	Wood Decking	L	286	20.00	2000		62		0.00	3,600
PAT1	Patio- Average	L	720	5.89	2000		81		0.00	3,200
GAR	Attached Gara	B	576	40.00	2002		85		0.00	17,400
BMT	Basement-Unfi	B	2,072	26.01	2002		85		0.00	39,100
SPH2	Pool Heater 50	L	1	3081.00	2017		96		0.00	3,000
PAT1	Patio- Average	L	640	5.89	1989		70		0.00	2,500

BUILDING SUB-AREA SUMMARY SECTION

Code	Description	Living Area	Floor Area	Eff Area	Unit Cost	Undeprec Value
BAS	First Floor	2,072	2,072	2,072	255.31	529,002
BMT	Basement Area	0	2,072	0	0.00	0
FAT	Attic, Finished	92	616	92	38.13	23,489
FOP	Open Porch	0	180	0	0.00	0
GAR	Attached Garage	0	576	0	0.00	0
PTO	Patio	0	720	0	0.00	0
TQS	Three Quarter Story	744	1,144	744	166.04	189,951
UAT	Attic, Unfinished	0	576	58	25.71	14,808
WDK	Wood Deck	0	286	0	0.00	0
	Ttl Gross Liv / Lease Area	2,908	8,242	2,966		757,250

Property Location 23 MIDDLE POND PATH | Map ID 080/ 020/ / / | Bldg Name | State Use 1010
Vision ID 4921 | Account # 42288 | Bldg # 1 | Sec # 1 of 1 | Card # 2 of 2 | Print Date 1/30/2024 9:56:48 PM

CURRENT OWNER

THEOHARIDIS, ALEXANDRE & TAYL
THEOHARIDIS REALTY TRUST
23 MIDDLE POND PATH

MARSTONS MIL MA 02648

TOPO		UTILITIES		STRT / ROAD		LOCATION	
1	Level	2	Public Water	1	Paved		
		4	Gas				
		6	Septic				

SUPPLEMENTAL DATA

Alt Prcl ID		Plan Ref.	203/53
Split Zonin		Land Ct#	
BID Parcel		#SR	
ResExpt Q	NO APP:	Life Estate	
#DL 1	LOT 40	PP STATU	
#DL 2			
GIS ID	F_952558_2705132	Assoc Pid#	

CURRENT ASSESSMENT

Description	Code	Assessed	Assessed
RESIDNTL	1010	767,800	767,800
RES LAND	1010	247,300	247,300
	Total	1,015,100	1,015,100

801

FY2024
BARNSTABLE, MA

VISION

RECORD OF OWNERSHIP

BK-VOL/PAGE		SALE DATE	Q/U	V/I	SALE PRIC	VC

PREVIOUS ASSESSMENTS (HISTORY)

Year	Code	Assessed	Year	Code	Assessed V	Year	Code	Assessed
2023	1010	694,100	2022	1010	590,500	2021	1010	490,300
	1010	224,800		1010	154,800		1010	157,200
							1010	26,000
	Total	918,900		Total	745,300		Total	673,500

EXEMPTIONS

Year	Code	Description	Amount
		Total	

OTHER ASSESSMENTS

Code	Description	Number	Amount	Comm Int

This signature acknowledges a visit by a Data Collector or Assessor

ASSESSING NEIGHBORHOOD

Nbhd	Nbhd Name	B	Tracing	Batch
0108				MARSTM

NOTES

APPRAISED VALUE SUMMARY

Appraised Bldg. Value (Card)	643,700
Appraised Xf (B) Value (Bldg)	98,100
Appraised Ob (B) Value (Bldg)	26,000
Appraised Land Value (Bldg)	247,300
Special Land Value	0
Total Appraised Parcel Value	1,015,100
Valuation Method	C
Total Appraised Parcel Value	1,015,100

BUILDING PERMIT RECORD

Permit Id	Issue Date	Type	Description	Amount	Insp Date	% Comp	Date Comp	Comments

VISIT / CHANGE HISTORY

Date	Id	Type	Is	Cd	Purpost/Result

LAND LINE VALUATION SECTION

B	Use Code	Description	Zone	LA	Land Units		Unit Price	Size Adj	AC Disc	Site Index	Cond.	Nbhd.	Nbhd. Adj	Notes	Location Adjustmen		Adj Unit P	Land Value

Total Card Land Units | Parcel Total Land Area | Total Land Value

Property Location 23 MIDDLE POND PATH | Map ID 080/ 020/ / / | Bldg Name | State Use 1010
Vision ID 4921 | Account # 42288 | Bldg # 1 | Sec # 1 of 1 | Card # 2 of 2 | Print Date 1/30/2024 9:56:48 PM

CONSTRUCTION DETAIL

Element	Cd	Description
Style	04	Cape Cod
Model	01	Residential
Grade:	C+	Average Plus
Stories	1.5	1 1/2 Stories
Exterior Wall 1	14	Wood Shingle
Exterior Wall 2	11	Clapboard
Roof Structure	03	Gable/Hip
Roof Cover	03	Asph/F Gls/Cmp
Interior Wall 1	03	Plastered
Interior Wall 2	05	Drywall
Interior Floor 1	14	Carpet
Interior Floor 2	12	Hardwood
Heat Fuel	03	Gas
Heat Type	05	Hot Water
AC Type	03	Central
Bedrooms	04	4 Bedrooms
Full Baths	3	
Half Baths	1	
Extra Fixtures		
Total Rooms	10	10 Rooms
Bath Style		
Kitchen Style		
Occupancy		
Usrfld 105		
Accessory Apt		
Foundation Alt	01	Poured Conc.
Rms Prts		
Bath Split	31	3 Full-1 Half

CONSTRUCTION DETAIL (CONTINUED)

Element	Cd	Description

CONDO DATA

Parcel Id		C		Owne	0.0
		B		S	

Adjust Type	Code	Description	Factor%
Condo Flr			
Condo Unit			

COST / MARKET VALUATION

Building Value New	
Year Built	
Effective Year Built	
Depreciation Code	
Remodel Rating	
Year Remodeled	
Depreciation %	
Functional Obsol	
External Obsol	
Trend Factor	
Condition	
Condition %	
Percent Good	
RCNLD	
Dep % Ovr	
Dep Ovr Comment	
Misc Imp Ovr	
Misc Imp Ovr Comment	
Cost to Cure Ovr	
Cost to Cure Ovr Comment	

OB - OUTBUILDING & YARD ITEMS(L) / XF - BUILDING EXTRA FEATURES(B)

Code	Description	L/B	Units	Unit Price	Yr Blt	Cond. Cd	% Gd	Grade	Grade Adj.	Appr. Value
FOPC	Open Prch-roo	B	180	55.00	2002		85		0.00	6,000

BUILDING SUB-AREA SUMMARY SECTION

Code	Description	Living Area	Floor Area	Eff Area	Unit Cost	Undeprec Value
	Ttl Gross Liv / Lease Area					