Property Location 9 HEZEKIAH'S WAY | Map ID 088/ 015/ / / | Bldg Name | State Use 1010
Vision ID 5050 | Account # 435407 | Bldg # 1 | Sec # 1 of 1 | Card # 1 of 2 | Print Date 1/30/2024 10:11:36 P

CURRENT OWNER

TAGLIAFERRO, VICTOR J & BARBAR

P O BOX 564

WEST BARNSTA MA 02668

TOPO / UTILITIES / STRT / ROAD / LOCATION

TOPO		UTILITIES		STRT / ROAD		LOCATION	
1	Level	4	Gas	1	Paved		
		5	Well				
		6	Septic				

SUPPLEMENTAL DATA

Alt Prcl ID		Plan Ref.	
Split Zonin		Land Ct#	40599-B
BID Parcel		#SR	
ResExpt Q	YES:	Life Estate	
#DL 1	LOT 13	PP STATU	
#DL 2			
GIS ID	F_955238_2722494	Assoc Pid#	

CURRENT ASSESSMENT

Description	Code	Assessed	Assessed
RESIDNTL	1010	573,100	573,100
RES LAND	1010	248,900	248,900
Total		822,000	822,000

801

FY2024
BARNSTABLE, MA

VISION

RECORD OF OWNERSHIP

	BK-VOL/PAGE		SALE DATE	Q/U	V/I	SALE PRIC	VC
TAGLIAFERRO, VICTOR J & BARBARA	C174966	0	11-05-2004	Q	I	525,000	00
DAVIS, PAUL M & KAREN A	C136414	0	02-15-1995	Q	V	43,900	U
SNOWDEN, LAURIE P TR	C135475	0	11-15-1994	U	V	103,000	A

PREVIOUS ASSESSMENTS (HISTORY)

Year	Code	Assessed	Year	Code	Assessed V	Year	Code	Assessed
2023	1010	494,300	2022	1010	409,400	2021	1010	345,200
	1010	226,400		1010	156,300		1010	158,700
							1010	34,100
	Total	720,700		Total	565,700		Total	538,000

EXEMPTIONS

Year	Code	Description	Amount
2024	5C	RESIDENTIAL EXEMPTION	
		Total	0.00

OTHER ASSESSMENTS

Code	Description	Number	Amount	Comm Int

This signature acknowledges a visit by a Data Collector or Assessor

ASSESSING NEIGHBORHOOD

Nbhd	Nbhd Name	B	Tracing	Batch
0107				WBARNS

NOTES

APPRAISED VALUE SUMMARY

Appraised Bldg. Value (Card)	473,100
Appraised Xf (B) Value (Bldg)	62,100
Appraised Ob (B) Value (Bldg)	37,900
Appraised Land Value (Bldg)	248,900
Special Land Value	0
Total Appraised Parcel Value	822,000
Valuation Method	C
Total Appraised Parcel Value	822,000

BUILDING PERMIT RECORD

Permit Id	Issue Date	Type	Description	Amount	Insp Date	% Comp	Date Comp	Comments
201303916	06-13-2013	PH	Pool Heater	0	04-01-2014	100	06-30-2014	POOL HTR
201204605	07-31-2012	NR	New Roof	10,400	06-30-2013	100	06-30-2013	REROOF STRIPPING OLD
20064316	11-01-2006	OB	Out Building	1,000	03-12-2008	100	06-30-2007	
B37436	02-01-1995	DW	Dwelling	117,000	01-15-1996	100	12-31-1996	WB 2 STOR

VISIT / CHANGE HISTORY

Date	Id	Type	Is	Cd	Purpost/Result
07-07-2023	JO	03		16	In Office Review
08-04-2022	TR	03		16	In Office Review
05-19-2020	DM			FR	Field Review
10-15-2019	CK	03		16	In Office Review
08-21-2019	AC	01		03	Cycl Insp Comp
04-01-2014	RB	03		16	In Office Review
03-12-2008	PT	02		14	Cyclical Inspection

LAND LINE VALUATION SECTION

B	Use Code	Description	Zone	LA	Land Units		Unit Price	Size Adj	AC Disc	Site Index	Cond.	Nbhd.	Nbhd. Adj	Notes	Location Adjustmen	Adj Unit P	Land Value
1	1010	Single Fam M-0	RF	5	1.000	AC	176,344.00	1.00000	1.0000	5	1.00	0107	1.400		1.0000	246,881.6	246,900
1	1010	Single Fam M-0	RF	5	0.100	AC	14,250.00	1.00000	1.0000	0	1.00	0107	1.400		1.0000	19,950	2,000

Total Card Land Units 1.10 AC | Parcel Total Land Area 1.10 | Total Land Value 248,900

Property Location 9 HEZEKIAH'S WAY | Map ID 088/ 015/ / / | Bldg Name | State Use 1010
Vision ID 5050 | Account # 435407 | Bldg # 1 | Sec # 1 of 1 | Card # 1 of 2 | Print Date 1/30/2024 10:11:37 P

CONSTRUCTION DETAIL

Element	Cd	Description
Style	03	Colonial
Model	01	Residential
Grade:	C+	Average Plus
Stories	2	2 Stories
Exterior Wall 1	14	Wood Shingle
Exterior Wall 2	11	Clapboard
Roof Structure	03	Gable/Hip
Roof Cover	03	Asph/F Gls/Cmp
Interior Wall 1	03	Plastered
Interior Wall 2		
Interior Floor 1	14	Carpet
Interior Floor 2	12	Hardwood
Heat Fuel	03	Gas
Heat Type	05	Hot Water
AC Type	03	Central
Bedrooms	03	3 Bedrooms
Full Baths	2	
Half Baths	1	
Extra Fixtures		
Total Rooms	7	7 Rooms
Bath Style		
Kitchen Style		
Occupancy		
Usrfld 105		
Accessory Apt		
Foundation Alt	01	Poured Conc.
Rms Prts		
Bath Split	21	2 Full-1 Half

CONSTRUCTION DETAIL (CONTINUED)

Element	Cd	Description

CONDO DATA

Parcel Id		C		Owne	0.0
		B		S	

Adjust Type	Code	Description	Factor%
Condo Flr			
Condo Unit			

COST / MARKET VALUATION

Building Value New	537,611
Year Built	1995
Effective Year Built	2003
Depreciation Code	A
Remodel Rating	
Year Remodeled	
Depreciation %	12
Functional Obsol	0
External Obsol	0
Trend Factor	1
Condition	
Condition %	
Percent Good	88
RCNLD	473,100
Dep % Ovr	
Dep Ovr Comment	
Misc Imp Ovr	
Misc Imp Ovr Comment	
Cost to Cure Ovr	
Cost to Cure Ovr Comment	

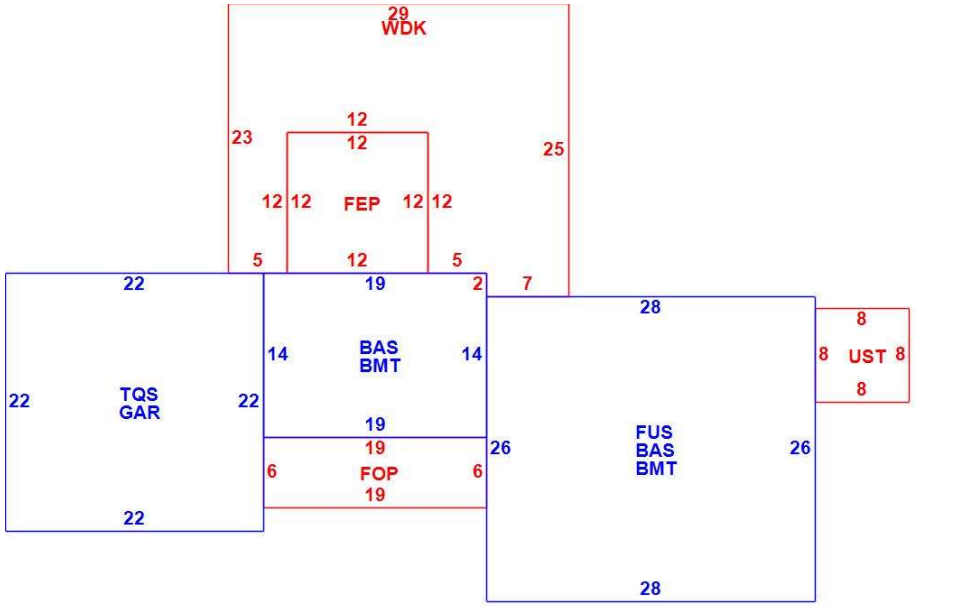

OB - OUTBUILDING & YARD ITEMS(L) / XF - BUILDING EXTRA FEATURES(B)

Code	Description	L/B	Units	Unit Price	Yr Blt	Cond. Cd	% Gd	Grade	Grade Adj.	Appr. Value
FPL2	Fireplace 1.5 s	B	1	6000.00	2005		88		0.00	5,300
SPL2	Pool Vinyl	L	576	55.00	1997		56	00	1.00	17,400
WDC	Wood Decking	L	537	20.00	2003		68		0.00	6,800
FOP	Open Porch-ro	B	114	55.00	2005		88		0.00	5,300
FEP	Enclosed porc	B	144	70.00	2005		88		0.00	9,100
GAR	Attached Gara	B	484	40.00	2005		88		0.00	16,000
UST	Utility Storage-	B	64	17.11	2005		88		0.00	900
BMT	Basement-Unfi	B	994	26.01	2005		88		0.00	23,300
SPH2	Pool Heater 50	L	1	3081.00	2013		88		0.00	2,700
FPLG	Gas Fireplace-	B	1	2500.00	2005		88		0.00	2,200

BUILDING SUB-AREA SUMMARY SECTION

Code	Description	Living Area	Floor Area	Eff Area	Unit Cost	Undeprec Value
BAS	First Floor	994	994	994	263.92	262,339
BMT	Basement Area	0	994	0	0.00	0
FEP	Enclosed Porch	0	144	0	0.00	0
FOP	Open Porch	0	114	0	0.00	0
FUS	Upper Story	728	728	728	263.92	192,136
GAR	Attached Garage	0	484	0	0.00	0
TQS	Three Quarter Story	315	484	315	171.77	83,136
UST	Utility Enclosure	0	64	0	0.00	0
WDK	Wood Deck	0	537	0	0.00	0
	Ttl Gross Liv / Lease Area	2,037	4,543	2,037		537,611

Property Location 9 HEZEKIAH'S WAY | Map ID 088/ 015/ / / | Bldg Name | State Use 1010
Vision ID 5050 | Account # 435407 | Bldg # 1 | Sec # 1 of 1 | Card # 2 of 2 | Print Date 1/30/2024 10:11:37 P

CURRENT OWNER

TAGLIAFERRO, VICTOR J & BARBAR

P O BOX 564

WEST BARNSTA MA 02668

TOPO / UTILITIES / STRT / ROAD / LOCATION

TOPO	UTILITIES	STRT / ROAD	LOCATION
1 Level	4 Gas	1 Paved	
	5 Well		
	6 Septic		

SUPPLEMENTAL DATA

Alt Prcl ID
Split Zonin
BID Parcel
ResExpt Q YES:
#DL 1 LOT 13
#DL 2
GIS ID F_955238_2722494

Plan Ref.
Land Ct# 40599-B
#SR
Life Estate
PP STATU
Assoc Pid#

CURRENT ASSESSMENT

Description	Code	Assessed	Assessed
RESIDNTL	1010	573,100	573,100
RES LAND	1010	248,900	248,900
Total		822,000	822,000

801

FY2024
BARNSTABLE, MA

VISION

RECORD OF OWNERSHIP

BK-VOL/PAGE		SALE DATE	Q/U	V/I	SALE PRIC	VC

PREVIOUS ASSESSMENTS (HISTORY)

Year	Code	Assessed	Year	Code	Assessed V	Year	Code	Assessed
2023	1010	494,300	2022	1010	409,400	2021	1010	345,200
	1010	226,400		1010	156,300		1010	158,700
							1010	34,100
	Total	720,700		Total	565,700		Total	538,000

EXEMPTIONS

Year	Code	Description	Amount
		Total	

OTHER ASSESSMENTS

Code	Description	Number	Amount	Comm Int

This signature acknowledges a visit by a Data Collector or Assessor

ASSESSING NEIGHBORHOOD

Nbhd	Nbhd Name	B	Tracing	Batch
0107				WBARNS

NOTES

APPRAISED VALUE SUMMARY

Appraised Bldg. Value (Card)	473,100
Appraised Xf (B) Value (Bldg)	62,100
Appraised Ob (B) Value (Bldg)	37,900
Appraised Land Value (Bldg)	248,900
Special Land Value	0
Total Appraised Parcel Value	822,000
Valuation Method	C
Total Appraised Parcel Value	822,000

BUILDING PERMIT RECORD

Permit Id	Issue Date	Type	Description	Amount	Insp Date	% Comp	Date Comp	Comments

VISIT / CHANGE HISTORY

Date	Id	Type	Is	Cd	Purpost/Result

LAND LINE VALUATION SECTION

B	Use Code	Description	Zone	LA	Land Units		Unit Price	Size Adj	AC Disc	Site Index	Cond.	Nbhd.	Nbhd. Adj	Notes	Location Adjustmen		Adj Unit P	Land Value

Total Card Land Units | Parcel Total Land Area | Total Land Value

CONSTRUCTION DETAIL

Element	Cd	Description
Style	03	Colonial
Model	01	Residential
Grade:	C+	Average Plus
Stories	2	2 Stories
Exterior Wall 1	14	Wood Shingle
Exterior Wall 2	11	Clapboard
Roof Structure	03	Gable/Hip
Roof Cover	03	Asph/F Gls/Cmp
Interior Wall 1	03	Plastered
Interior Wall 2		
Interior Floor 1	14	Carpet
Interior Floor 2	12	Hardwood
Heat Fuel	03	Gas
Heat Type	05	Hot Water
AC Type	03	Central
Bedrooms	03	3 Bedrooms
Full Baths	2	
Half Baths	1	
Extra Fixtures		
Total Rooms	7	7 Rooms
Bath Style		
Kitchen Style		
Occupancy		
Usrfld 105		
Accessory Apt		
Foundation Alt	01	Poured Conc.
Rms Prts		
Bath Split	21	2 Full-1 Half

CONSTRUCTION DETAIL (CONTINUED)

Element	Cd	Description

CONDO DATA

Parcel Id		C		Owne	0.0
		B		S	

Adjust Type	Code	Description	Factor%
Condo Flr			
Condo Unit			

COST / MARKET VALUATION

Building Value New	
Year Built	
Effective Year Built	
Depreciation Code	
Remodel Rating	
Year Remodeled	
Depreciation %	
Functional Obsol	
External Obsol	
Trend Factor	
Condition	
Condition %	
Percent Good	
RCNLD	
Dep % Ovr	
Dep Ovr Comment	
Misc Imp Ovr	
Misc Imp Ovr Comment	
Cost to Cure Ovr	
Cost to Cure Ovr Comment	

OB - OUTBUILDING & YARD ITEMS(L) / XF - BUILDING EXTRA FEATURES(B)

Code	Description	L/B	Units	Unit Price	Yr Blt	Cond. Cd	% Gd	Grade	Grade Adj.	Appr. Value
SHD2	Shed w/Elec	L	120	26.00	2010		82		0.00	2,600
GEN	Emergency Ge	L	1	5550.00	2010		82		0.00	4,600
PAT1	Patio- Average	L	768	5.89	2010		91		0.00	3,800

BUILDING SUB-AREA SUMMARY SECTION

Code	Description	Living Area	Floor Area	Eff Area	Unit Cost	Undeprec Value
	Ttl Gross Liv / Lease Area					