Property Location 204 GARRISON LANE | Map ID 114/ 005/ 003/ / | Bldg Name | State Use 1010
Vision ID 6456 | Account # 54728 | Bldg # 1 | Sec # 1 of 1 | Card # 1 of 2 | Print Date 1/31/2024 11:45:10 A

CURRENT OWNER

MCLAUGHLIN, DANIEL T & RACHEL

204 GARRISON LN

OSTERVILLE MA 02655

TOPO	UTILITIES	STRT / ROAD	LOCATION
			7 Waterfront

SUPPLEMENTAL DATA

Alt Prcl ID		Plan Ref.	
Split Zonin		Land Ct#	2664-109
BID Parcel		#SR	
ResExpt Q	YES:	Life Estate	
#DL 1	LOT 223	PP STATU	
#DL 2			
GIS ID	F_958366_2686862	Assoc Pid#	

CURRENT ASSESSMENT

Description	Code	Assessed	Assessed
RESIDNTL	1010	3,877,900	3,877,900
RES LAND	1010	8,801,200	8,801,200
Total		12,679,100	12,679,100

801

FY2024
BARNSTABLE, MA

VISION

RECORD OF OWNERSHIP

	BK-VOL/PAGE		SALE DATE	Q/U	V/I	SALE PRIC	VC
MCLAUGHLIN, DANIEL T & RACHEL R	C153460	0	06-08-1999	Q	I	3,150,000	00
ATKINSON, EUGENE D & CAROL A	C135837	0	12-15-1994	U	I	750,000	D
WELLS, C MCGREGORY III & MARY MAT	C86002	0	06-30-1981	U		0	

PREVIOUS ASSESSMENTS (HISTORY)

Year	Code	Assessed	Year	Code	Assessed V	Year	Code	Assessed
2023	1010	3,037,000	2022	1010	2,807,600	2021	1010	2,169,100
	1010	8,079,800		1010	4,829,600		1010	4,553,600
							1010	279,800
	Total	11,116,800		Total	7,637,200		Total	7,002,500

EXEMPTIONS

Year	Code	Description	Amount
2015	5C	RESIDENTIAL EXEMPTION	0.00
		Total	0.00

OTHER ASSESSMENTS

Code	Description	Number	Amount	Comm Int

This signature acknowledges a visit by a Data Collector or Assessor

ASSESSING NEIGHBORHOOD

Nbhd	Nbhd Name	B	Tracing	Batch
WF13				OSTVIL

NOTES

APPRAISED VALUE SUMMARY

Appraised Bldg. Value (Card)	3,440,400
Appraised Xf (B) Value (Bldg)	157,700
Appraised Ob (B) Value (Bldg)	279,800
Appraised Land Value (Bldg)	8,801,200
Special Land Value	0
Total Appraised Parcel Value	12,679,100
Valuation Method	C
Total Appraised Parcel Value	12,679,100

BUILDING PERMIT RECORD

Permit Id	Issue Date	Type	Description	Amount	Insp Date	% Comp	Date Comp	Comments
59257	02-27-2002	OB	Out Building	51,840	04-30-2003	100		POOL HOUSE
48273	08-25-2000	SP	Swimming Pool	80,000	05-30-2002	100	01-01-2004	25 X 40
46727	06-12-2000	DW	Dwelling	1,315,000	05-30-2002	100	01-01-2004	
31306	06-02-1998	DK	Dock	23,500	06-03-2002	100	01-01-2002	
31232	05-02-1998	DW	Dwelling	550,000		100		VOID

VISIT / CHANGE HISTORY

Date	Id	Type	Is	Cd	Purpost/Result
05-28-2020	WD			FR	Field Review
05-22-2017	SR	02		14	Cyclical Inspection
07-24-2014	TR	03		16	In Office Review
08-14-2013	JR	03		20	Sale Review
05-24-2011	JR	03		16	In Office Review
08-30-2010	NF	03		16	In Office Review
10-05-2006	PT	02		44	Drive by inspection only

LAND LINE VALUATION SECTION

B	Use Code	Description	Zone	LA	Land Units		Unit Price	Size Adj	AC Disc	Site Index	Cond.	Nbhd.	Nbhd. Adj	Notes	Location Adjustmen	Adj Unit P	Land Value
1	1010	Single Fam M-0	RF-1	3	1.000	AC	176,344.00	1.00000	1.0000	5	1.00	WF13	45.000		1.0000	7,935,480	7,935,500
1	1010	Single Fam M-0	RF-1	3	1.350	AC	14,250.00	1.00000	1.0000	0	1.00	WF13	45.000		1.0000	641,250	865,700

Total Card Land Units 2.35 AC | Parcel Total Land Area 2.35 | Total Land Value 8,801,200

Property Location 204 GARRISON LANE | Map ID 114/ 005/ 003/ / | Bldg Name | State Use 1010
Vision ID 6456 | Account # 54728 | Bldg # 1 | Sec # 1 of 1 | Card # 1 of 2 | Print Date 1/31/2024 11:45:10 A

CONSTRUCTION DETAIL

Element	Cd	Description
Style	07	Modern/Contemp
Model	01	Residential
Grade:	A+	Luxury Plus
Stories	2	2 Stories
Exterior Wall 1	14	Wood Shingle
Exterior Wall 2		
Roof Structure	03	Gable/Hip
Roof Cover	10	Wood Shingle
Interior Wall 1	03	Plastered
Interior Wall 2		
Interior Floor 1	12	Hardwood
Interior Floor 2	11	Ceram Clay Til
Heat Fuel	03	Gas
Heat Type	08	Radiant
AC Type	03	Central
Bedrooms	05	5 Bedrooms
Full Baths	7	
Half Baths	0	
Extra Fixtures		
Total Rooms	16	16 Rooms
Bath Style	02	Average
Kitchen Style	02	Modernized
Occupancy		
Usrfld 105		
Accessory Apt		
Foundation Alt	01	Poured Conc.
Rms Prts		
Bath Split	70	7 Full-0 Half

CONSTRUCTION DETAIL (CONTINUED)

Element	Cd	Description

CONDO DATA

Parcel Id		C		Owne	0.0
		B		S	

Adjust Type	Code	Description	Factor%
Condo Flr			
Condo Unit			

COST / MARKET VALUATION

Building Value New	3,780,679
Year Built	2002
Effective Year Built	2007
Depreciation Code	A
Remodel Rating	
Year Remodeled	
Depreciation %	9
Functional Obsol	0
External Obsol	0
Trend Factor	1
Condition	
Condition %	
Percent Good	91
RCNLD	3,440,400
Dep % Ovr	
Dep Ovr Comment	
Misc Imp Ovr	
Misc Imp Ovr Comment	
Cost to Cure Ovr	
Cost to Cure Ovr Comment	

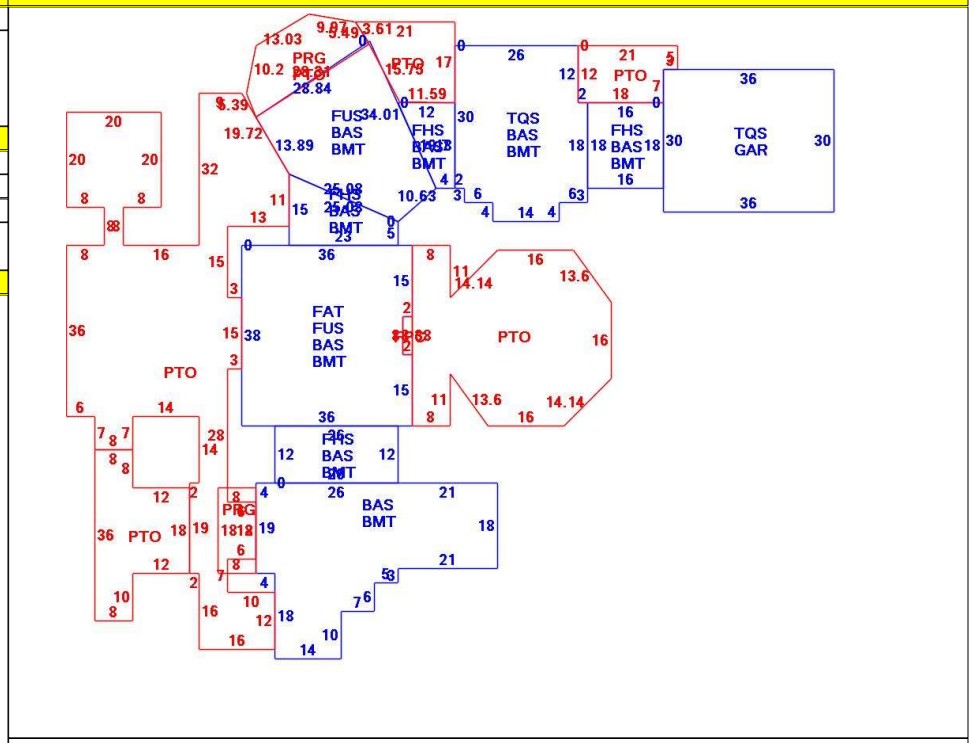

OB - OUTBUILDING & YARD ITEMS(L) / XF - BUILDING EXTRA FEATURES(B)

Code	Description	L/B	Units	Unit Price	Yr Blt	Cond. Cd	% Gd	Grade	Grade Adj.	Appr. Value
DKAV	Dock-Ave	L	1	100000.0	2003		68		0.00	68,000
FPL1	Fireplace 1 sto	B	4	5000.00	2009		91		0.00	18,200
SPL3	Pool Gunite	L	1,000	75.00	2003		68	00	1.00	49,000
PHS3	Pool Hs/Good,	L	500	180.00	2003		84	00	1.00	75,600
PATC	Conc Pavers	L	5,707	15.46	2006		87		0.00	55,500
FOP	Open Porch-ro	B	299	55.00	2009		91		0.00	10,700
GAR	Attached Gara	B	1,080	40.00	2009		91		0.00	30,100
BMT	Basement-Unfi	B	5,322	26.01	2009		91		0.00	97,500
FOPC	Open Prch-roo	B	16	55.00	2009		91		0.00	1,200
FPIT	Fire Pit	L	1	3010.00	2006		87	C	1.00	2,600

BUILDING SUB-AREA SUMMARY SECTION

Code	Description	Living Area	Floor Area	Eff Area	Unit Cost	Undeprec Value
BAS	First Floor	5,322	5,322	5,322	399.48	2,126,033
BMT	Basement Area	0	5,322	0	0.00	0
FAT	Attic, Finished	203	1,352	203	59.98	81,094
FHS	Half Story	487	974	487	199.74	194,547
FPC	Open Porch Conc. Floor	0	16	0	0.00	0
FUS	Upper Story	2,132	2,132	2,132	399.48	851,691
GAR	Attached Garage	0	1,080	0	0.00	0
PRG	Pergola	0	437	0	0.00	0
PTO	Patio	0	5,427	0	0.00	0
TQS	Three Quarter Story	1,320	2,030	1,320	259.76	527,314
	Ttl Gross Liv / Lease Area	9,464	24,092	9,464		3,780,679

Property Location 204 GARRISON LANE | Map ID 114/ 005/ 003/ / | Bldg Name | State Use 1010
Vision ID 6456 | Account # 54728 | Bldg # 1 | Sec # 1 of 1 | Card # 2 of 2 | Print Date 1/31/2024 11:45:10 A

CURRENT OWNER	TOPO	UTILITIES	STRT / ROAD	LOCATION
MCLAUGHLIN, DANIEL T & RACHEL				7 Waterfront
204 GARRISON LN				
OSTERVILLE MA 02655				

SUPPLEMENTAL DATA

Alt Prcl ID		Plan Ref.	
Split Zonin		Land Ct#	2664-109
BID Parcel		#SR	
ResExpt Q	YES:	Life Estate	
#DL 1	LOT 223	PP STATU	
#DL 2			
GIS ID	F_958366_2686862	Assoc Pid#	

CURRENT ASSESSMENT

Description	Code	Assessed	Assessed
RESIDNTL	1010	3,877,900	3,877,900
RES LAND	1010	8,801,200	8,801,200
	Total	12,679,100	12,679,100

801

FY2024
BARNSTABLE, MA

VISION

RECORD OF OWNERSHIP

BK-VOL/PAGE		SALE DATE	Q/U	V/I	SALE PRIC	VC

PREVIOUS ASSESSMENTS (HISTORY)

Year	Code	Assessed	Year	Code	Assessed V	Year	Code	Assessed
2023	1010	3,037,000	2022	1010	2,807,600	2021	1010	2,169,100
	1010	8,079,800		1010	4,829,600		1010	4,553,600
							1010	279,800
	Total	11,116,800		Total	7,637,200		Total	7,002,500

EXEMPTIONS

Year	Code	Description	Amount
		Total	

OTHER ASSESSMENTS

Code	Description	Number	Amount	Comm Int

This signature acknowledges a visit by a Data Collector or Assessor

APPRAISED VALUE SUMMARY

Appraised Bldg. Value (Card)	3,440,400
Appraised Xf (B) Value (Bldg)	157,700
Appraised Ob (B) Value (Bldg)	279,800
Appraised Land Value (Bldg)	8,801,200
Special Land Value	0
Total Appraised Parcel Value	12,679,100
Valuation Method	C
Total Appraised Parcel Value	12,679,100

ASSESSING NEIGHBORHOOD

Nbhd	Nbhd Name	B	Tracing	Batch
WF13				OSTVIL

NOTES

BUILDING PERMIT RECORD

Permit Id	Issue Date	Type	Description	Amount	Insp Date	% Comp	Date Comp	Comments

VISIT / CHANGE HISTORY

Date	Id	Type	Is	Cd	Purpost/Result

LAND LINE VALUATION SECTION

B	Use Code	Description	Zone	LA	Land Units		Unit Price	Size Adj	AC Disc	Site Index	Cond.	Nbhd.	Nbhd. Adj	Notes	Location Adjustmen		Adj Unit P	Land Value

Total Card Land Units | Parcel Total Land Area | Total Land Value

Property Location 204 GARRISON LANE | Map ID 114/ 005/ 003/ / | Bldg Name | State Use 1010
Vision ID 6456 | Account # 54728 | Bldg # 1 | Sec # 1 of 1 | Card # 2 of 2 | Print Date 1/31/2024 11:45:11 A

CONSTRUCTION DETAIL

Element	Cd	Description
Style	07	Modern/Contemp
Model	01	Residential
Grade:	A+	Luxury Plus
Stories	2	2 Stories
Exterior Wall 1	14	Wood Shingle
Exterior Wall 2		
Roof Structure	03	Gable/Hip
Roof Cover	10	Wood Shingle
Interior Wall 1	03	Plastered
Interior Wall 2		
Interior Floor 1	12	Hardwood
Interior Floor 2	11	Ceram Clay Til
Heat Fuel	03	Gas
Heat Type	08	Radiant
AC Type	03	Central
Bedrooms	05	5 Bedrooms
Full Baths	7	
Half Baths	0	
Extra Fixtures		
Total Rooms	16	16 Rooms
Bath Style	02	Average
Kitchen Style	02	Modernized
Occupancy		
Usrfld 105		
Accessory Apt		
Foundation Alt	01	Poured Conc.
Rms Prts		
Bath Split	70	7 Full-0 Half

CONSTRUCTION DETAIL (CONTINUED)

Element	Cd	Description

CONDO DATA

Parcel Id		C		Owne	0.0
		B		S	

Adjust Type	Code	Description	Factor%
Condo Flr			
Condo Unit			

COST / MARKET VALUATION

Building Value New	
Year Built	
Effective Year Built	
Depreciation Code	
Remodel Rating	
Year Remodeled	
Depreciation %	
Functional Obsol	
External Obsol	
Trend Factor	
Condition	
Condition %	
Percent Good	
RCNLD	
Dep % Ovr	
Dep Ovr Comment	
Misc Imp Ovr	
Misc Imp Ovr Comment	
Cost to Cure Ovr	
Cost to Cure Ovr Comment	

OB - OUTBUILDING & YARD ITEMS(L) / XF - BUILDING EXTRA FEATURES(B)

Code	Description	L/B	Units	Unit Price	Yr Blt	Cond. Cd	% Gd	Grade	Grade Adj.	Appr. Value
PRG1	Pergola-Avg	L	437	18.00	2007		76	C	1.00	6,000
STRS	Stairs to Water	L	10	122.52	2003		68	C	1.00	800
GEN1	Large Generat	L	1	29300.00	2007		76		0.00	22,300

BUILDING SUB-AREA SUMMARY SECTION

Code	Description	Living Area	Floor Area	Eff Area	Unit Cost	Undeprec Value
Ttl Gross Liv / Lease Area						