Property Location 256 PARKER ROAD | Map ID 116/ 067/ / / | Bldg Name | State Use 1090
Vision ID 6642 | Account # 56450 | Bldg # 1 | Sec # 1 of 1 | Card # 1 of 2 | Print Date 1/31/2024 12:07:24 P

CURRENT OWNER

SWARTWOOD, ALEXANDER B & CYN

348 SOUTH MAIN STREET

COHASSET MA 02025

TOPO / UTILITIES / STRT / ROAD / LOCATION

TOPO		UTILITIES		STRT / ROAD		LOCATION	
1	Level	6	Septic	1	Paved		
		4	Gas				
		2	Public Water				

SUPPLEMENTAL DATA

Alt Prcl ID		Plan Ref.	90/91
Split Zonin	RC;RF-1	Land Ct#	
BID Parcel		#SR	
ResExpt Q		Life Estate	
#DL 1		PP STATU	
#DL 2			
GIS ID	F_960990_2689267	Assoc Pid#	

CURRENT ASSESSMENT

Description	Code	Assessed	Assessed
RESIDNTL	1090	426,900	426,900
RES LAND	1090	959,700	959,700
Total		1,386,600	1,386,600

801

FY2024
BARNSTABLE, MA

VISION

RECORD OF OWNERSHIP

	BK-VOL/PAGE		SALE DATE	Q/U	V/I	SALE PRIC	VC
SWARTWOOD, ALEXANDER B & CYNTHI	32769	0037	03-19-2020	Q	I	800,000	00
256 PARKER ROAD LLC	30959	0162	12-13-2017	U	I	100	1F
KENNEDY, MARY JANE & DABBELT, DAN	25610	0068	08-09-2011	U	I	1	1F
DABBELT, DANIEL C & KENNEDY, MARY	13939	0002	06-15-2001	Q	I	481,000	00
CALLAHAN, PETER & PAMELA J	12529	0235	09-09-1999	U	I	399,000	3

PREVIOUS ASSESSMENTS (HISTORY)

Year	Code	Assessed	Year	Code	Assessed V	Year	Code	Assessed
2023	1090	371,200	2022	1090	302,800	2021	1090	286,200
	1090	872,500		1090	706,900		1090	757,400
							1090	2,800
	Total	1,243,700		Total	1,009,700		Total	1,046,400

EXEMPTIONS

Year	Code	Description	Amount
		Total	0.00

OTHER ASSESSMENTS

Code	Description	Number	Amount	Comm Int

This signature acknowledges a visit by a Data Collector or Assessor

ASSESSING NEIGHBORHOOD

Nbhd	Nbhd Name	B	Tracing	Batch
0115				OSTVIL

NOTES

APPRAISED VALUE SUMMARY

Appraised Bldg. Value (Card)	402,600
Appraised Xf (B) Value (Bldg)	21,500
Appraised Ob (B) Value (Bldg)	2,800
Appraised Land Value (Bldg)	959,700
Special Land Value	0
Total Appraised Parcel Value	1,386,600
Valuation Method	C
Total Appraised Parcel Value	1,386,600

BUILDING PERMIT RECORD

Permit Id	Issue Date	Type	Description	Amount	Insp Date	% Comp	Date Comp	Comments
BLDR-23-14	10-30-2023	880	Alt-Int work-Res	85,000		100		Replace windows and reconfig
BLDR-21-14	12-15-2021	880	Alt-Int work-Res	40,000	06-30-2022	100	06-30-2022	Kitchen remodel to include re
22184	04-03-1997	RW	Repair Work	25,000	09-01-1998	100	01-01-1998	

VISIT / CHANGE HISTORY

Date	Id	Type	Is	Cd	Purpost/Result
07-07-2020	CK	03		16	In Office Review
05-28-2020	WD			FR	Field Review
12-06-2017	KM	02		03	Cycl Insp Comp
04-20-2017	KM	02		03	Cycl Insp Comp
09-30-2015	LH	03		16	In Office Review
06-24-2014	TW	22		22	Change of Address
12-04-2013	DR	22		22	Change of Address

LAND LINE VALUATION SECTION

B	Use Code	Description	Zone	LA	Land Units		Unit Price	Size Adj	AC Disc	Site Index	Cond.	Nbhd.	Nbhd. Adj	Notes	Location Adjustmen	Adj Unit P	Land Value
1	1090	Multi Hses M-01	SPLI	3	0.280	AC	176,344.00	3.03702	1.0000	5	1.00	0115	6.400		1.0000	3,427,580	959,700

Total Card Land Units 0.28 AC | Parcel Total Land Area 0.28 | Total Land Value 959,700

Property Location 256 PARKER ROAD | Map ID 116/ 067/ / / | Bldg Name | State Use 1090
Vision ID 6642 | Account # 56450 | Bldg # 1 | Sec # 1 of 1 | Card # 1 of 2 | Print Date 1/31/2024 12:07:25 P

CONSTRUCTION DETAIL

Element	Cd	Description
Style	01	Ranch
Model	01	Residential
Grade:	C	Average
Stories	1	1 Story
Exterior Wall 1	14	Wood Shingle
Exterior Wall 2		
Roof Structure	03	Gable/Hip
Roof Cover	03	Asph/F Gls/Cmp
Interior Wall 1	07	Knotty Pine
Interior Wall 2		
Interior Floor 1	12	Hardwood
Interior Floor 2		
Heat Fuel	03	Gas
Heat Type	04	Hot Air
AC Type	03	Central
Bedrooms	04	4 Bedrooms
Full Baths	2	
Half Baths	1	
Extra Fixtures		
Total Rooms	7	7 Rooms
Bath Style		
Kitchen Style		
Occupancy		
Usrfld 105	2	
Accessory Apt		
Foundation Alt	01	Poured Conc.
Rms Prts		
Bath Split	21	2 Full-1 Half

CONSTRUCTION DETAIL (CONTINUED)

Element	Cd	Description

CONDO DATA

Parcel Id		C		Owne	0.0
		B		S	

Adjust Type	Code	Description	Factor%
Condo Flr			
Condo Unit			

COST / MARKET VALUATION

Building Value New	508,630
Year Built	1950
Effective Year Built	1976
Depreciation Code	F
Remodel Rating	
Year Remodeled	
Depreciation %	33
Functional Obsol	0
External Obsol	0
Trend Factor	1
Condition	
Condition %	
Percent Good	67
RCNLD	340,800
Dep % Ovr	
Dep Ovr Comment	
Misc Imp Ovr	
Misc Imp Ovr Comment	
Cost to Cure Ovr	
Cost to Cure Ovr Comment	

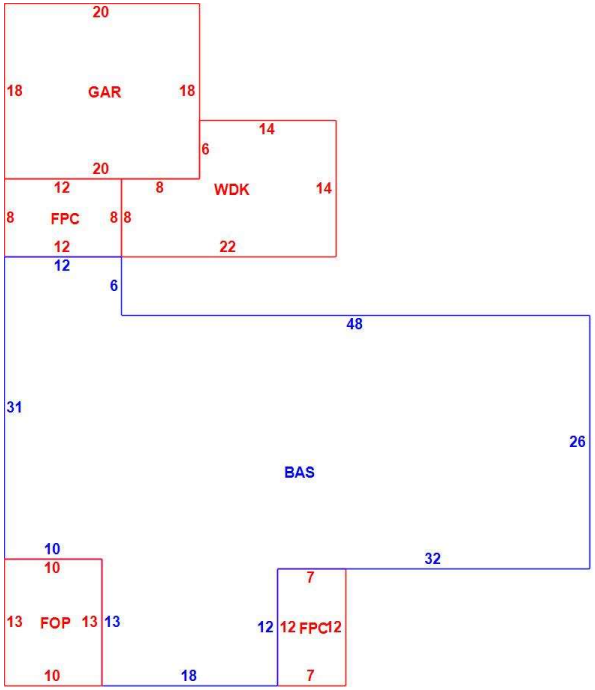

OB - OUTBUILDING & YARD ITEMS(L) / XF - BUILDING EXTRA FEATURES(B)

Code	Description	L/B	Units	Unit Price	Yr Blt	Cond. Cd	% Gd	Grade	Grade Adj.	Appr. Value
FPL1	Fireplace 1 sto	B	1	5000.00	1983		67		0.00	3,400
WDC	Deck composit	L	260	24.00	1990		42		0.00	2,800
FOPC	Open Prch-roo	B	310	55.00	1983		67		0.00	8,000
GAR	Attached Gara	B	360	40.00	1983		67		0.00	10,100

BUILDING SUB-AREA SUMMARY SECTION

Code	Description	Living Area	Floor Area	Eff Area	Unit Cost	Undeprec Value
BAS	First Floor	1,838	1,838	1,838	276.73	508,630
FOP	Open Porch	0	130	0	0.00	0
FPC	Open Porch Conc. Floor	0	180	0	0.00	0
GAR	Attached Garage	0	360	0	0.00	0
WDK	Wood Deck	0	260	0	0.00	0
	Ttl Gross Liv / Lease Area	1,838	2,768	1,838		508,630

Property Location 256 PARKER ROAD | Map ID 116/ 067/ / / | Bldg Name | State Use 1090
Vision ID 6642 | Account # 56450 | Bldg # 2 | Sec # 1 of 1 | Card # 2 of 2 | Print Date 1/31/2024 12:07:25 P

CURRENT OWNER

SWARTWOOD, ALEXANDER B & CYN

348 SOUTH MAIN STREET

COHASSET MA 02025

TOPO / UTILITIES / STRT / ROAD / LOCATION

TOPO		UTILITIES		STRT / ROAD		LOCATION	
1	Level	6	Septic	1	Paved		
		4	Gas				
		2	Public Water				

SUPPLEMENTAL DATA

Alt Prcl ID		Plan Ref.	90/91
Split Zonin	RC;RF-1	Land Ct#	
BID Parcel		#SR	
ResExpt Q		Life Estate	
#DL 1		PP STATU	
#DL 2			
GIS ID	F_960990_2689267	Assoc Pid#	

CURRENT ASSESSMENT

Description	Code	Assessed	Assessed
RESIDNTL	1090	426,900	426,900
RES LAND	1090	959,700	959,700
	Total	1,386,600	1,386,600

801

FY2024
BARNSTABLE, MA

VISION

RECORD OF OWNERSHIP

	BK-VOL/PAGE		SALE DATE	Q/U	V/I	SALE PRIC	VC
SWARTWOOD, ALEXANDER B & CYNTHI	32769	0037	03-19-2020	Q	I	800,000	00
256 PARKER ROAD LLC	30959	0162	12-13-2017	U	I	100	1F
KENNEDY, MARY JANE & DABBELT, DAN	25610	0068	08-09-2011	U	I	1	1F
DABBELT, DANIEL C & KENNEDY, MARY	13939	0002	06-15-2001	Q	I	481,000	00
CALLAHAN, PETER & PAMELA J	12529	0235	09-09-1999	U	I	399,000	3

PREVIOUS ASSESSMENTS (HISTORY)

Year	Code	Assessed	Year	Code	Assessed V	Year	Code	Assessed
2023	1090	371,200	2022	1090	302,800	2021	1090	286,200
	1090	872,500		1090	706,900		1090	757,400
							1090	2,800
	Total	1,243,700		Total	1,009,700		Total	1,046,400

EXEMPTIONS

Year	Code	Description	Amount
		Total	0.00

OTHER ASSESSMENTS

Code	Description	Number	Amount	Comm Int

This signature acknowledges a visit by a Data Collector or Assessor

APPRAISED VALUE SUMMARY

Appraised Bldg. Value (Card)	402,600
Appraised Xf (B) Value (Bldg)	21,500
Appraised Ob (B) Value (Bldg)	2,800
Appraised Land Value (Bldg)	959,700
Special Land Value	0
Total Appraised Parcel Value	1,386,600
Valuation Method	C
Total Appraised Parcel Value	1,386,600

ASSESSING NEIGHBORHOOD

Nbhd	Nbhd Name	B	Tracing	Batch
0115				OSTVIL

NOTES

ING 10% OF A PIER FOUNDAT
N

BUILDING PERMIT RECORD

Permit Id	Issue Date	Type	Description	Amount	Insp Date	% Comp	Date Comp	Comments

VISIT / CHANGE HISTORY

Date	Id	Type	Is	Cd	Purpost/Result

LAND LINE VALUATION SECTION

B	Use Code	Description	Zone	LA	Land Units		Unit Price	Size Adj	AC Disc	Site Index	Cond.	Nbhd.	Nbhd. Adj	Notes	Location Adjustmen		Adj Unit P	Land Value
2	1090	Multi Hses M-01	SPLI	3	0	SF	0.00	1.00000	1.0000	5	1.00	0115	6.400			0.0000	0	0

Total Card Land Units 0.00 SF | Parcel Total Land Area 0.28 | Total Land Value 0

Property Location 256 PARKER ROAD | Map ID 116/ 067/ / / | Bldg Name | State Use 1090
Vision ID 6642 | Account # 56450 | Bldg # 2 | Sec # 1 of 1 | Card # 2 of 2 | Print Date 1/31/2024 12:07:26 P

CONSTRUCTION DETAIL

Element	Cd	Description
Style	36	Cottage
Model	01	Residential
Grade:	C-	Average Minus
Stories	1	1 Story
Exterior Wall 1	14	Wood Shingle
Exterior Wall 2		
Roof Structure	03	Gable/Hip
Roof Cover	03	Asph/F Gls/Cmp
Interior Wall 1	05	Drywall
Interior Wall 2		
Interior Floor 1	12	Hardwood
Interior Floor 2		
Heat Fuel	04	Electric
Heat Type	07	Elec Baseboard
AC Type	01	None
Bedrooms	02	2 Bedrooms
Full Baths	1	
Half Baths	0	
Extra Fixtures		
Total Rooms	4	4 Rooms
Bath Style		
Kitchen Style		
Occupancy		
Usrfld 105		
Accessory Apt		
Foundation Alt	06	Piers
Rms Prts		
Bath Split	10	1 Full-0 Half

CONSTRUCTION DETAIL (CONTINUED)

Element	Cd	Description

CONDO DATA

Parcel Id		C		Owne	0.0
		B		S	

Adjust Type	Code	Description	Factor%
Condo Flr			
Condo Unit			

COST / MARKET VALUATION

Building Value New	92,202
Year Built	1950
Effective Year Built	1976
Depreciation Code	F
Remodel Rating	
Year Remodeled	
Depreciation %	33
Functional Obsol	0
External Obsol	0
Trend Factor	1
Condition	
Condition %	
Percent Good	67
RCNLD	61,800
Dep % Ovr	
Dep Ovr Comment	
Misc Imp Ovr	
Misc Imp Ovr Comment	
Cost to Cure Ovr	
Cost to Cure Ovr Comment	

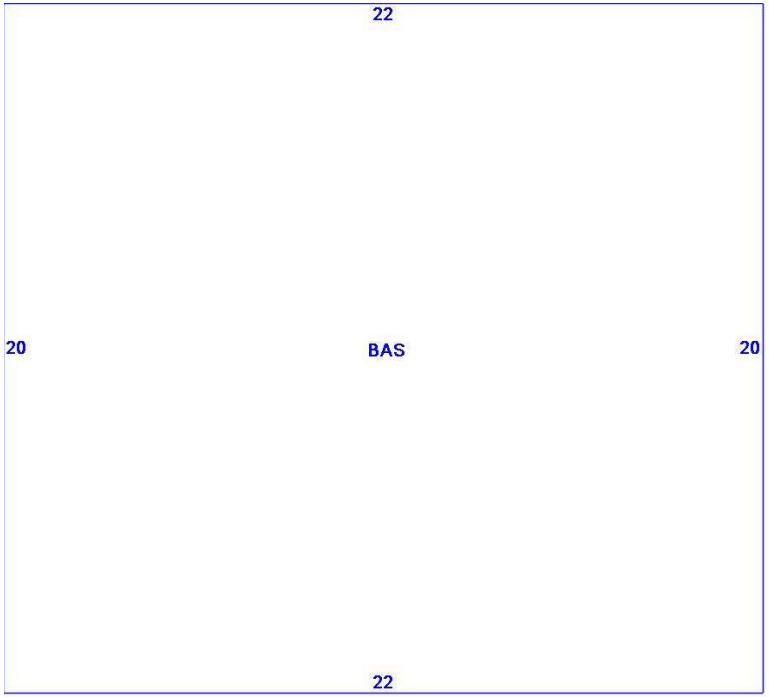

OB - OUTBUILDING & YARD ITEMS(L) / XF - BUILDING EXTRA FEATURES(B)

Code	Description	L/B	Units	Unit Price	Yr Blt	Cond. Cd	% Gd	Grade	Grade Adj.	Appr. Value

BUILDING SUB-AREA SUMMARY SECTION

Code	Description	Living Area	Floor Area	Eff Area	Unit Cost	Undeprec Value
BAS	First Floor	440	440	440	209.55	92,202
	Ttl Gross Liv / Lease Area	440	440	440		92,202