Property Location 104 DEER JUMP HILL | Map ID 132/ 041/ / / | Bldg Name | State Use 1010
Vision ID 8385 | Account # 71362 | Bldg # 1 | Sec # 1 of 1 | Card # 1 of 2 | Print Date 1/31/2024 3:27:39 PM

CURRENT OWNER

CUTLER, RICHARD E JR & DULIN, KI

104 DEER JUMP HILL

WEST BARNSTA MA 02668

TOPO		UTILITIES		STRT / ROAD		LOCATION	
2	Above Street	6	Septic	1	Paved		
		5	Well				
		4	Gas				

SUPPLEMENTAL DATA

Alt Prcl ID		Plan Ref.	
Split Zonin		Land Ct#	37808-B
BID Parcel		#SR	
ResExpt Q		Life Estate	
#DL 1	LOT 16	PP STATU	
#DL 2			
GIS ID	F_959089_2722537	Assoc Pid#	

CURRENT ASSESSMENT

Description	Code	Assessed	Assessed
RESIDNTL	1010	495,900	495,900
RES LAND	1010	303,700	303,700
Total		799,600	799,600

801

FY2024
BARNSTABLE, MA

VISION

RECORD OF OWNERSHIP

	BK-VOL/PAGE		SALE DATE	Q/U	V/I	SALE PRIC	VC
CUTLER, RICHARD E JR & DULIN, KIMB	C204236	0	08-22-2014	Q	I	474,000	00
BEAN, BARBARA A	C171918	0	01-22-2004	U	I	1	1A
BEAN, DOUGLAS J & BARBARA A	C102922	0	08-15-1985	Q	V	53,000	U
SHIELDS, THOMAS M , B W C	C99732	0	01-15-1985	U	V	200,000	N
FRISHMAN, DANIEL	C98157	0	09-15-1984	U		0	A

PREVIOUS ASSESSMENTS (HISTORY)

Year	Code	Assessed	Year	Code	Assessed V	Year	Code	Assessed
2023	1010	495,900	2022	1010	434,500	2021	1010	344,600
	1010	300,800		1010	193,600		1010	205,800
							1010	46,300
	Total	796,700		Total	628,100		Total	596,700

EXEMPTIONS

Year	Code	Description	Amount
		Total	0.00

OTHER ASSESSMENTS

Code	Description	Number	Amount	Comm Int

This signature acknowledges a visit by a Data Collector or Assessor

ASSESSING NEIGHBORHOOD

Nbhd	Nbhd Name	B	Tracing	Batch
0108				WBARNS

NOTES

APPRAISED VALUE SUMMARY

Appraised Bldg. Value (Card)	375,700
Appraised Xf (B) Value (Bldg)	73,900
Appraised Ob (B) Value (Bldg)	46,300
Appraised Land Value (Bldg)	303,700
Special Land Value	0
Total Appraised Parcel Value	799,600
Valuation Method	C
Total Appraised Parcel Value	799,600

BUILDING PERMIT RECORD

Permit Id	Issue Date	Type	Description	Amount	Insp Date	% Comp	Date Comp	Comments
16-886	04-25-2016	839	Solar Panel-Re	41,766	08-12-2016	100	06-30-2017	7.848 kw photovoltaic system
16-315	02-24-2016	804	Addn Alt-Res	70,000	08-12-2016	100	06-30-2017	build front porch, remove and r
201503614	06-19-2015	PV	Solar PV Syste	17,650	07-29-2015	100	06-30-2016	SOLAR HOT WATER AND SO
B32004	06-01-1988	SP	Swimming Pool	9,000	06-30-1988	100	06-30-1988	WB SW.POO
B29386	05-01-1986	DW	Dwelling	140,000	01-15-1987	100	01-15-1987	WB 11/2 S

VISIT / CHANGE HISTORY

Date	Id	Type	Is	Cd	Purpost/Result
05-20-2020	DM			FR	Field Review
02-06-2020	CK	22		22	Change of Address
06-29-2017	SR	01		02	Bldg Permit Completed
05-04-2016	SR	02		13	CALL BACK
01-20-2016	SR	02		02	Bldg Permit Completed
08-07-2015	JR	03		20	Sale Review
08-17-2010	NF	03		16	In Office Review

LAND LINE VALUATION SECTION

B	Use Code	Description	Zone	LA	Land Units		Unit Price	Size Adj	AC Disc	Site Index	Cond.	Nbhd.	Nbhd. Adj	Notes	Location Adjustmen	Adj Unit P	Land Value
1	1010	Single Fam M-0	RF	5	1.000	AC	176,344.00	1.00000	1.0000	5	1.00	0108	1.700	RR TRAX	1.0000	299,784.8	299,800
1	1010	Single Fam M-0	RF	5	0.160	AC	14,250.00	1.00000	1.0000	0	1.00	0108	1.700		1.0000	24,225	3,900

Total Card Land Units 1.16 AC | Parcel Total Land Area 1.16 | Total Land Value 303,700

Property Location 104 DEER JUMP HILL | Map ID 132/ 041/ / / | Bldg Name | State Use 1010
Vision ID 8385 | Account # 71362 | Bldg # 1 | Sec # 1 of 1 | Card # 1 of 2 | Print Date 1/31/2024 3:27:39 PM

CONSTRUCTION DETAIL

Element	Cd	Description
Style	05	Saltbox
Model	01	Residential
Grade:	C	Average
Stories	1.75	1 3/4 Stories
Exterior Wall 1	11	Clapboard
Exterior Wall 2		
Roof Structure	03	Gable/Hip
Roof Cover	03	Asph/F Gls/Cmp
Interior Wall 1	05	Drywall
Interior Wall 2		
Interior Floor 1	09	Pine/Soft Wood
Interior Floor 2		
Heat Fuel	03	Gas
Heat Type	05	Hot Water
AC Type	01	None
Bedrooms	04	4 Bedrooms
Full Baths	3	
Half Baths	1	
Extra Fixtures		
Total Rooms	8	8 Rooms
Bath Style	02	Average
Kitchen Style	02	Modernized
Occupancy		
Usrfld 105		
Accessory Apt		
Foundation Alt	01	Poured Conc.
Rms Prts		
Bath Split	31	3 Full-1 Half

CONSTRUCTION DETAIL (CONTINUED)

Element	Cd	Description

CONDO DATA

Parcel Id		C		Owne	0.0
		B		S	

Adjust Type	Code	Description	Factor%
Condo Flr			
Condo Unit			

COST / MARKET VALUATION

Building Value New	426,945
Year Built	1986
Effective Year Built	2004
Depreciation Code	G
Remodel Rating	
Year Remodeled	
Depreciation %	12
Functional Obsol	0
External Obsol	0
Trend Factor	1
Condition	
Condition %	
Percent Good	88
RCNLD	375,700
Dep % Ovr	
Dep Ovr Comment	
Misc Imp Ovr	
Misc Imp Ovr Comment	
Cost to Cure Ovr	
Cost to Cure Ovr Comment	

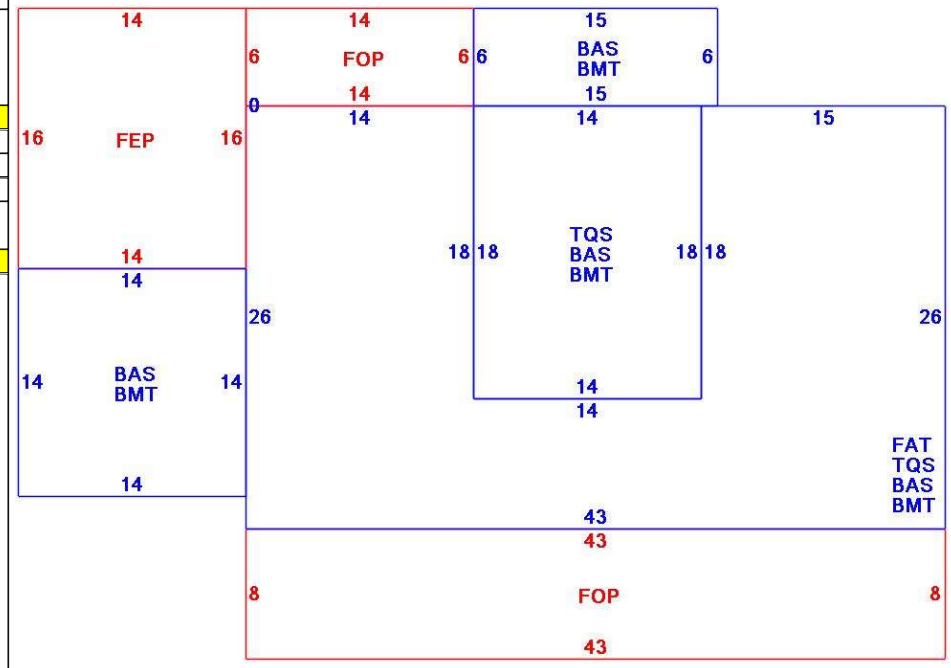

OB - OUTBUILDING & YARD ITEMS(L) / XF - BUILDING EXTRA FEATURES(B)

Code	Description	L/B	Units	Unit Price	Yr Blt	Cond. Cd	% Gd	Grade	Grade Adj.	Appr. Value
SPL2	Pool Vinyl	L	544	55.00	1988		38	00	1.00	11,200
BFA	Bsmt Fin-Avg	B	754	17.36	2006		88		0.00	11,500
FGR6	Gar w/Lft Avg	L	572	60.00	1990		71	00	1.00	24,400
FOP	Open Porch-ro	B	428	55.00	2006		88		0.00	14,600
BMT	Basement-Unfi	B	1,404	26.01	2006		88		0.00	29,700
PAT1	Patio- Average	L	800	5.89	1988		69		0.00	3,000
SOLT	Solar Thermal	B	90	86.00	2006		0		0.00	0
SOLT	Solar Thermal	B	60	86.00	2006		0		0.00	0
FEP	Enclosed porc	B	224	70.00	2006		88		0.00	11,900
SHD2	Shed w/Elec	L	192	26.00	2016		94		0.00	4,700

BUILDING SUB-AREA SUMMARY SECTION

Code	Description	Living Area	Floor Area	Eff Area	Unit Cost	Undeprec Value
BAS	First Floor	1,404	1,404	1,404	188.83	265,117
BMT	Basement Area	0	1,404	0	0.00	0
FAT	Attic, Finished	130	866	130	28.35	24,548
FEP	Enclosed Porch	0	224	0	0.00	0
FOP	Open Porch	0	428	0	0.00	0
TQS	Three Quarter Story	727	1,118	727	122.79	137,279
	Ttl Gross Liv / Lease Area	2,261	5,444	2,261		426,944

Property Location 104 DEER JUMP HILL | Map ID 132/ 041/ / / | Bldg Name | State Use 1010
Vision ID 8385 | Account # 71362 | Bldg # 1 | Sec # 1 of 1 | Card # 2 of 2 | Print Date 1/31/2024 3:27:40 PM

CURRENT OWNER

CUTLER, RICHARD E JR & DULIN, KI

104 DEER JUMP HILL

WEST BARNSTA MA 02668

TOPO		UTILITIES		STRT / ROAD		LOCATION	
2	Above Street	6	Septic	1	Paved		
		5	Well				
		4	Gas				

SUPPLEMENTAL DATA

Alt Prcl ID		Plan Ref.	
Split Zonin		Land Ct#	37808-B
BID Parcel		#SR	
ResExpt Q		Life Estate	
#DL 1	LOT 16	PP STATU	
#DL 2			
GIS ID	F_959089_2722537	Assoc Pid#	

CURRENT ASSESSMENT

Description	Code	Assessed	Assessed
RESIDNTL	1010	495,900	495,900
RES LAND	1010	303,700	303,700
	Total	799,600	799,600

801

FY2024
BARNSTABLE, MA

VISION

RECORD OF OWNERSHIP

BK-VOL/PAGE		SALE DATE	Q/U	V/I	SALE PRIC	VC

PREVIOUS ASSESSMENTS (HISTORY)

Year	Code	Assessed	Year	Code	Assessed V	Year	Code	Assessed
2023	1010	495,900	2022	1010	434,500	2021	1010	344,600
	1010	300,800		1010	193,600		1010	205,800
							1010	46,300
	Total	796,700		Total	628,100		Total	596,700

EXEMPTIONS

Year	Code	Description	Amount
		Total	

OTHER ASSESSMENTS

Code	Description	Number	Amount	Comm Int

This signature acknowledges a visit by a Data Collector or Assessor

ASSESSING NEIGHBORHOOD

Nbhd	Nbhd Name	B	Tracing	Batch
0108				WBARNS

NOTES

APPRAISED VALUE SUMMARY

Appraised Bldg. Value (Card)	375,700
Appraised Xf (B) Value (Bldg)	73,900
Appraised Ob (B) Value (Bldg)	46,300
Appraised Land Value (Bldg)	303,700
Special Land Value	0
Total Appraised Parcel Value	799,600
Valuation Method	C
Total Appraised Parcel Value	799,600

BUILDING PERMIT RECORD

Permit Id	Issue Date	Type	Description	Amount	Insp Date	% Comp	Date Comp	Comments

VISIT / CHANGE HISTORY

Date	Id	Type	Is	Cd	Purpost/Result

LAND LINE VALUATION SECTION

B	Use Code	Description	Zone	LA	Land Units		Unit Price	Size Adj	AC Disc	Site Index	Cond.	Nbhd.	Nbhd. Adj	Notes	Location Adjustmen		Adj Unit P	Land Value

Total Card Land Units | Parcel Total Land Area | Total Land Value

Property Location 104 DEER JUMP HILL | Map ID 132/ 041/ / / | Bldg Name | State Use 1010
Vision ID 8385 | Account # 71362 | Bldg # 1 | Sec # 1 of 1 | Card # 2 of 2 | Print Date 1/31/2024 3:27:40 PM

CONSTRUCTION DETAIL

Element	Cd	Description
Style	05	Saltbox
Model	01	Residential
Grade:	C	Average
Stories	1.75	1 3/4 Stories
Exterior Wall 1	11	Clapboard
Exterior Wall 2		
Roof Structure	03	Gable/Hip
Roof Cover	03	Asph/F Gls/Cmp
Interior Wall 1	05	Drywall
Interior Wall 2		
Interior Floor 1	09	Pine/Soft Wood
Interior Floor 2		
Heat Fuel	03	Gas
Heat Type	05	Hot Water
AC Type	01	None
Bedrooms	04	4 Bedrooms
Full Baths	3	
Half Baths	1	
Extra Fixtures		
Total Rooms	8	8 Rooms
Bath Style	02	Average
Kitchen Style	02	Modernized
Occupancy		
Usrfld 105		
Accessory Apt		
Foundation Alt	01	Poured Conc.
Rms Prts		
Bath Split	31	3 Full-1 Half

CONSTRUCTION DETAIL (CONTINUED)

Element	Cd	Description

CONDO DATA

Parcel Id		C		Owne	0.0
		B		S	

Adjust Type	Code	Description	Factor%
Condo Flr			
Condo Unit			

COST / MARKET VALUATION

Building Value New	
Year Built	
Effective Year Built	
Depreciation Code	
Remodel Rating	
Year Remodeled	
Depreciation %	
Functional Obsol	
External Obsol	
Trend Factor	
Condition	
Condition %	
Percent Good	
RCNLD	
Dep % Ovr	
Dep Ovr Comment	
Misc Imp Ovr	
Misc Imp Ovr Comment	
Cost to Cure Ovr	
Cost to Cure Ovr Comment	

OB - OUTBUILDING & YARD ITEMS(L) / XF - BUILDING EXTRA FEATURES(B)

Code	Description	L/B	Units	Unit Price	Yr Blt	Cond. Cd	% Gd	Grade	Grade Adj.	Appr. Value
WDC	Wood Decking	L	64	20.00	2016		94		0.00	3,000
FPL3	Fireplace 2 sto	B	1	7000.00	2006		88		0.00	6,200
SOL1	Solar PV Pane	B	24	860.00	2006		0		0.00	0

BUILDING SUB-AREA SUMMARY SECTION

Code	Description	Living Area	Floor Area	Eff Area	Unit Cost	Undeprec Value
Ttl Gross Liv / Lease Area						