Property Location 1761 SANTUIT-NEWTOWN ROAD | Map ID 023/ 018/ / / | Bldg Name | State Use 1010
Vision ID 1240 | Account # 11695 | Bldg # 1 | Sec # 1 of 1 | Card # 1 of 1 | Print Date 12/18/2024 7:54:11 P

CURRENT OWNER

GLAVINE, JANE

1761 SANTUIT-NEWTOWN RD

COTUIT MA 02635

TOPO		UTILITIES		STRT / ROAD		LOCATION	
2	Above Street	2	Public Water				
		4	Gas	1	Paved		
		6	Septic			2	

SUPPLEMENTAL DATA

Alt Prcl ID
Split Zonin
BID Parcel
ResExpt Q YES:
#DL 1
#DL 2
GIS ID F_943981_2694215

Plan Ref.
Land Ct#
#SR
Life Estate
PP STATU
Assoc Pid#

CURRENT ASSESSMENT

Description	Code	Assessed	Assessed
RESIDNTL	1010	275,800	275,800
RES LAND	1010	173,100	173,100
Total		448,900	448,900

801

FY2025
BARNSTABLE, MA

VISION

RECORD OF OWNERSHIP

	BK-VOL/PAGE		SALE DATE	Q/U	V/I	SALE PRIC	VC
GLAVINE, JANE	12502	0301	08-27-1999	Q	I	115,000	00
KOLKER, ROBERT J & CHARLAINE S	10453	0151	10-25-1996	Q	I	58,000	U
SOUZA, DONALD	10453	0150	10-25-1996	U	I	0	1
SOUZA, JOHN R	10453	0148	10-25-1996	U		0	A
SOUZA, JOHN R & CLARA E	0536	0386	02-19-1938	U		0	

PREVIOUS ASSESSMENTS (HISTORY)

Year	Code	Assessed	Year	Code	Assessed V	Year	Code	Assessed
2025	1010	275,800	2024	1010	257,300	2023	1010	227,200
	1010	173,100		1010	173,100		1010	157,300
	Total	448,900		Total	430,400		Total	384,500

EXEMPTIONS

Year	Code	Description	Amount
2014	5C	RESIDENTIAL EXEMPTION	0.00
		Total	0.00

OTHER ASSESSMENTS

Code	Description	Number	Amount	Comm Int

This signature acknowledges a visit by a Data Collector or Assessor

ASSESSING NEIGHBORHOOD

Nbhd	Nbhd Name	B	Tracing	Batch
0105				COTUIT

NOTES

APPRAISED VALUE SUMMARY

Appraised Bldg. Value (Card)	256,600
Appraised Xf (B) Value (Bldg)	16,000
Appraised Ob (B) Value (Bldg)	3,200
Appraised Land Value (Bldg)	173,100
Special Land Value	0
Total Appraised Parcel Value	448,900
Valuation Method	C
Total Appraised Parcel Value	448,900

BUILDING PERMIT RECORD

Permit Id	Issue Date	Type	Description	Amount	Insp Date	% Comp	Date Comp	Comments
16-1740	06-30-2016	822	Insulation	3,668	06-30-2017	100	06-30-2017	weatherization
201504409	07-15-2015	NW	New Windows	3,000	06-30-2016	100	06-30-2016	REPLACE 4 WINDOWS .32 U
200800326	01-28-2008	PV	Solar PV Syste	6,000	01-28-2008	100	06-30-2009	PV SOLAR 20 - 180 EVERGR
19413	11-20-1996	AD	Addition	39,600	08-21-1997	100	01-01-1999	AD KIT

VISIT / CHANGE HISTORY

Date	Id	Type	Is	Cd	Purpost/Result
05-27-2020	DM			FR	Field Review
10-28-2014	TR	22		22	Change of Address
06-25-2014	GC	03		16	In Office Review
03-03-2014	SR	02		03	Cycl Insp Comp
08-12-2008	MK	02		52	New Construction
12-04-2007	NF	03		16	In Office Review
03-29-2005	PT	02		01	Meas/Est

LAND LINE VALUATION SECTION

B	Use Code	Description	Zone	LA	Land Units		Unit Price	Size Adj	AC Disc	Site Index	Cond.	Nbhd.	Nbhd. Adj	Notes	Location Adjustmen	Adj Unit P	Land Value
1	1010	Single Fam M-0	RF	2	0.800	AC	176,344.00	1.22679	1.0000	5	1.00	0105	1.000		1.0000	216,338.8	173,100

Total Card Land Units 0.80 AC | Parcel Total Land Area 0.80 | Total Land Value 173,100

Property Location 1761 SANTUIT-NEWTOWN ROAD | Map ID 023/ 018/ / / | Bldg Name | State Use 1010
Vision ID 1240 | Account # 11695 | Bldg # 1 | Sec # 1 of 1 | Card # 1 of 1 | Print Date 12/18/2024 7:54:12 P

CONSTRUCTION DETAIL

Element	Cd	Description
Style	04	Cape Cod
Model	01	Residential
Grade:	C	Average
Stories	1.5	1 1/2 Stories
Exterior Wall 1	14	Wood Shingle
Exterior Wall 2		
Roof Structure	03	Gable/Hip
Roof Cover	03	Asph/F Gls/Cmp
Interior Wall 1	05	Drywall
Interior Wall 2		
Interior Floor 1	12	Hardwood
Interior Floor 2	02	Minimum/Plywd
Heat Fuel	03	Gas
Heat Type	05	Hot Water
AC Type	01	None
Bedrooms	02	2 Bedrooms
Full Baths	1	
Half Baths	0	
Extra Fixtures		
Total Rooms	3	3 Rooms
Bath Style		
Kitchen Style		
Occupancy		
Sewer Occupan		
Accessory Apt		
Foundation Alt	08	Mixed
Rms Prts		
Bath Split	10	1 Full-0 Half

CONSTRUCTION DETAIL (CONTINUED)

Element	Cd	Description

CONDO DATA

Parcel Id		C		Owne	0.0
		B		S	

Adjust Type	Code	Description	Factor%
Condo Flr			
Condo Unit			

COST / MARKET VALUATION

Building Value New	371,863
Year Built	1932
Effective Year Built	1984
Depreciation Code	A
Remodel Rating	
Year Remodeled	
Depreciation %	31
Functional Obsol	0
External Obsol	0
Trend Factor	1
Condition	
Condition %	
Percent Good	69
RCNLD	256,600
Dep % Ovr	
Dep Ovr Comment	
Misc Imp Ovr	
Misc Imp Ovr Comment	
Cost to Cure Ovr	
Cost to Cure Ovr Comment	

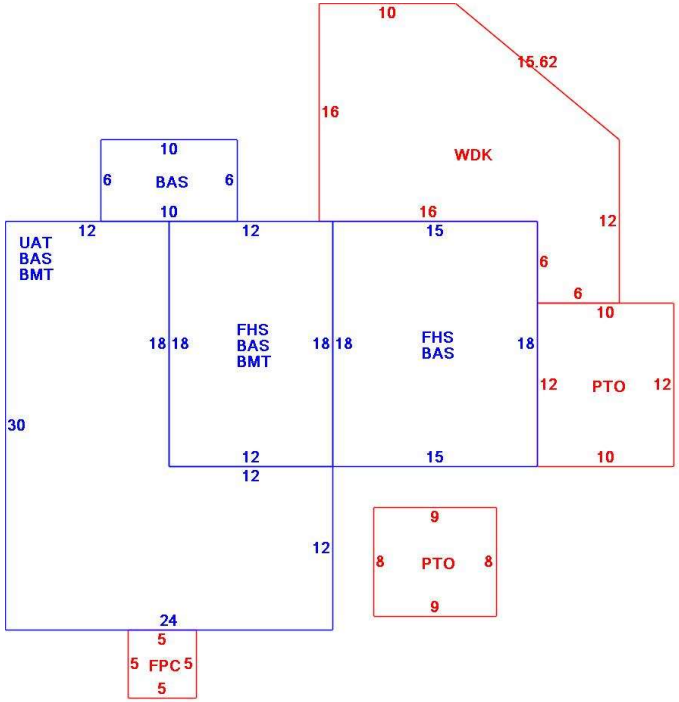

OB - OUTBUILDING & YARD ITEMS(L) / XF - BUILDING EXTRA FEATURES(B)

Code	Description	L/B	Units	Unit Price	Yr Blt	Cond. Cd	% Gd	Grade	Grade Adj.	Appr. Value
WDC	Wood Deck w/	L	328	18.00	1986		34		0.00	2,000
PAT1	Patio- Average	L	120	5.89	1986		67		0.00	600
FOPC	Open Prch-roo	B	25	55.00	1979		69		0.00	1,200
BMT	Basement-Unfi	B	720	26.01	1979		69		0.00	14,800
SOL1	Solar PV Pane	B	20	860.00	1979		0		0.00	0
PAT2	Patio-Good	L	72	9.94	1986		67		0.00	600

BUILDING SUB-AREA SUMMARY SECTION

Code	Description	Living Area	Floor Area	Eff Area	Unit Cost	Undeprec Value
BAS	First Floor	1,050	1,050	1,050	276.89	290,735
BMT	Basement Area	0	720	0	0.00	0
FHS	Half Story	243	486	243	138.45	67,284
FPC	Open Porch Conc. Floor	0	25	0	0.00	0
PTO	Patio	0	192	0	0.00	0
UAT	Attic, Unfinished	0	504	50	27.47	13,845
WDK	Wood Deck	0	328	0	0.00	0
	Ttl Gross Liv / Lease Area	1,293	3,305	1,343		371,864