Property Location 265 SOUTH MAIN STREET | Map ID 207/ 097/ 004/ / | Bldg Name | State Use 1010
Vision ID 14585 | Account # 352497 | Bldg # 1 | Sec # 1 of 1 | Card # 1 of 2 | Print Date 12/19/2024 11:21:48

CURRENT OWNER

BOUDREAU, PHILIP M & ALEXANDRI

265 SOUTH MAIN ST

CENTERVILLE MA 02632

TOPO / UTILITIES / STRT / ROAD / LOCATION

TOPO		UTILITIES		STRT / ROAD		LOCATION	
1	Level	2	Public Water	1	Paved	9	Rear Location
		4	Gas				
		6	Septic			3	

SUPPLEMENTAL DATA

Alt Prcl ID		Plan Ref.	408/39
Split Zonin		Land Ct#	
BID Parcel		#SR	
ResExpt Q	YES:	Life Estate	
#DL 1	LOT B5	PP STATU	
#DL 2			
GIS ID	F_972412_2698156	Assoc Pid#	

CURRENT ASSESSMENT

Description	Code	Assessed	Assessed
RESIDNTL	1010	724,000	724,000
RES LAND	1010	302,700	302,700
Total		1,026,700	1,026,700

801

FY2025
BARNSTABLE, MA

VISION

RECORD OF OWNERSHIP

	BK-VOL/PAGE		SALE DATE	Q/U	V/I	SALE PRIC	VC
BOUDREAU, PHILIP M & ALEXANDRIA	6192	0306	03-15-1988	Q	I	92,500	U
FERRERO, KIM E	6192	0299	03-15-1988	Q	V	70,000	U
FERRERO, KIM E	6192	0299	03-15-1988	Q	V	70,000	U
FERRERO, KIM E	6192	0299	03-15-1988	Q	V	70,000	U
ORBE, OCTAVIUS A&ELEANOR TRS	4923	0027	02-15-1986	U	V	1	N

PREVIOUS ASSESSMENTS (HISTORY)

Year	Code	Assessed	Year	Code	Assessed V	Year	Code	Assessed
2025	1010	724,000	2024	1010	750,800	2023	1010	596,200
	1010	302,700		1010	302,700		1010	299,800
	Total	1,026,700		Total	1,053,500		Total	896,000

EXEMPTIONS

Year	Code	Description	Amount
2011	5C	RESIDENTIAL EXEMPTION	0.00
		Total	0.00

OTHER ASSESSMENTS

Code	Description	Number	Amount	Comm Int

This signature acknowledges a visit by a Data Collector or Assessor

ASSESSING NEIGHBORHOOD

Nbhd	Nbhd Name	B	Tracing	Batch
0108				CENVIL

NOTES

APPRAISED VALUE SUMMARY

Appraised Bldg. Value (Card)	611,300
Appraised Xf (B) Value (Bldg)	66,000
Appraised Ob (B) Value (Bldg)	46,700
Appraised Land Value (Bldg)	302,700
Special Land Value	0
Total Appraised Parcel Value	1,026,700
Valuation Method	C
Total Appraised Parcel Value	1,026,700

BUILDING PERMIT RECORD

Permit Id	Issue Date	Type	Description	Amount	Insp Date	% Comp	Date Comp	Comments
EXPR-24-1	07-31-2024	835		29,575		0		Strip and re-roof approximately
201107204	12-29-2011	RE	Remodel	33,000	06-30-2012	100	06-30-2012	REMOD KIT,POWDER RM,LA
59211	02-21-2002	SP	Swimming Pool	25,000	11-22-2002	100	01-01-2003	
B34869	03-01-1992	DW	Dwelling	175,000	01-15-1993	100		CE 11/2 S

VISIT / CHANGE HISTORY

Date	Id	Type	Is	Cd	Purpost/Result
05-18-2020	WD			FR	Field Review
02-05-2020	CK	02		03	Cycl Insp Comp
09-03-2009	PT	04		44	Drive by inspection only
06-04-2007	NF	03		15	Abatement Review
05-30-2007	NF	01		00	Meas/Listed-Interior Acces
11-22-2002	MF	02		02	Bldg Permit Completed
10-19-2001	PT	01		00	Meas/Listed-Interior Acces

LAND LINE VALUATION SECTION

B	Use Code	Description	Zone	LA	Land Units		Unit Price	Size Adj	AC Disc	Site Index	Cond.	Nbhd.	Nbhd. Adj	Notes	Location Adjustmen	Adj Unit P	Land Value
1	1010	Single Fam M-0	RC	3	1.000	AC	176,344.00	1.00000	1.0000	5	1.00	0108	1.700		1.0000	299,784.8	299,800
1	1010	Single Fam M-0	RC	3	0.120	AC	14,250.00	1.00000	1.0000	0	1.00	0108	1.700		1.0000	24,225	2,900

Total Card Land Units 1.12 AC | Parcel Total Land Area 1.12 | Total Land Value 302,700

Property Location 265 SOUTH MAIN STREET | Map ID 207/ 097/ 004/ / | Bldg Name | State Use 1010
Vision ID 14585 | Account # 352497 | Bldg # 1 | Sec # 1 of 1 | Card # 1 of 2 | Print Date 12/19/2024 11:21:49

CONSTRUCTION DETAIL

Element	Cd	Description
Style	07	Modern/Contemp
Model	01	Residential
Grade:	C+	Average Plus
Stories	1.8	
Exterior Wall 1	14	Wood Shingle
Exterior Wall 2	11	Clapboard
Roof Structure	03	Gable/Hip
Roof Cover	03	Asph/F Gls/Cmp
Interior Wall 1	03	Plastered
Interior Wall 2		
Interior Floor 1	14	Carpet
Interior Floor 2	12	Hardwood
Heat Fuel	03	Gas
Heat Type	04	Hot Air
AC Type	03	Central
Bedrooms	03	3 Bedrooms
Full Baths	2	
Half Baths	1	
Extra Fixtures		
Total Rooms	8	8 Rooms
Bath Style		
Kitchen Style		
Occupancy		
Sewer Occupan		
Accessory Apt		
Foundation Alt	01	Poured Conc.
Rms Prts		
Bath Split	21	2 Full-1 Half

CONSTRUCTION DETAIL (CONTINUED)

Element	Cd	Description

CONDO DATA

Parcel Id		C		Owne	0.0
		B		S	

Adjust Type	Code	Description	Factor%
Condo Flr			
Condo Unit			

COST / MARKET VALUATION

Building Value New	710,759
Year Built	1992
Effective Year Built	2006
Depreciation Code	A
Remodel Rating	
Year Remodeled	
Depreciation %	14
Functional Obsol	0
External Obsol	0
Trend Factor	1
Condition	
Condition %	
Percent Good	86
RCNLD	611,300
Dep % Ovr	
Dep Ovr Comment	
Misc Imp Ovr	
Misc Imp Ovr Comment	
Cost to Cure Ovr	
Cost to Cure Ovr Comment	

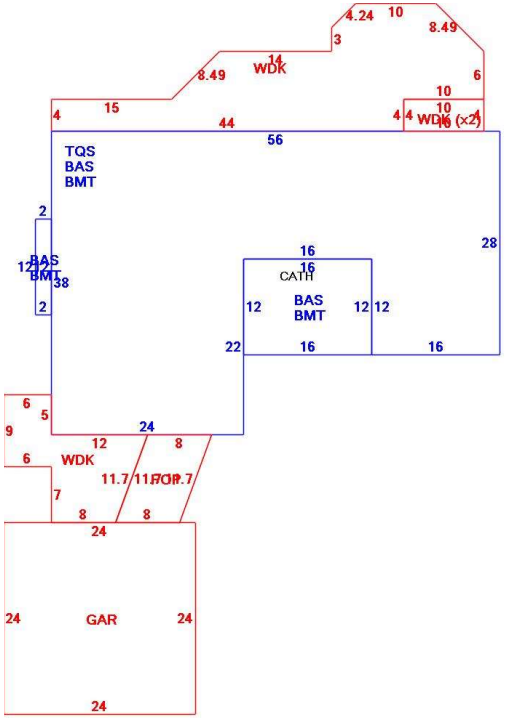

OB - OUTBUILDING & YARD ITEMS(L) / XF - BUILDING EXTRA FEATURES(B)

Code	Description	L/B	Units	Unit Price	Yr Blt	Cond. Cd	% Gd	Grade	Grade Adj.	Appr. Value
FPL2	Fireplace 1.5 s	B	1	6000.00	2004		86		0.00	5,200
SPL3	Pool Gunite	L	636	75.00	2002		56	00	1.00	28,200
WDC	Wood Decking	L	40	20.00	2001		64		0.00	1,600
FOP	Open Porch-ro	B	88	55.00	2004		86		0.00	4,400
GAR	Attached Gara	B	576	40.00	2004		86		0.00	17,600
BMT	Basement-Unfi	B	1,832	26.01	2004		86		0.00	35,700
SHD2	Shed w/Elec	L	96	26.00	2002		66		0.00	1,600
PAT1	Patio- Average	L	200	5.89	2002		83		0.00	1,100
SPDC	POOL DECK	L	200	5.61	2002		83		0.00	900
BRR	Bsmt Rec Rm-	B	448	8.05	2004		86		0.00	3,100

BUILDING SUB-AREA SUMMARY SECTION

Code	Description	Living Area	Floor Area	Eff Area	Unit Cost	Undeprec Value
BAS	First Floor	1,832	1,832	1,832	246.62	451,808
BMT	Basement Area	0	1,832	0	0.00	0
FOP	Open Porch	0	88	0	0.00	0
GAR	Attached Garage	0	576	0	0.00	0
TQS	Three Quarter Story	1,050	1,616	1,050	160.24	258,951
WDK	Wood Deck	0	728	0	0.00	0
	Ttl Gross Liv / Lease Area	2,882	6,672	2,882		710,759

Property Location 265 SOUTH MAIN STREET | Map ID 207/ 097/ 004/ / | Bldg Name | State Use 1010
Vision ID 14585 | Account # 352497 | Bldg # 1 | Sec # 1 of 1 | Card # 2 of 2 | Print Date 12/19/2024 11:21:49

CURRENT OWNER

BOUDREAU, PHILIP M & ALEXANDRI

265 SOUTH MAIN ST

CENTERVILLE MA 02632

TOPO / UTILITIES / STRT / ROAD / LOCATION

TOPO		UTILITIES		STRT / ROAD		LOCATION	
1	Level	2	Public Water	1	Paved	9	Rear Location
		4	Gas				
		6	Septic			3	

SUPPLEMENTAL DATA

Alt Prcl ID		Plan Ref.	408/39
Split Zonin		Land Ct#	
BID Parcel		#SR	
ResExpt Q	YES:	Life Estate	
#DL 1	LOT B5	PP STATU	
#DL 2			
GIS ID	F_972412_2698156	Assoc Pid#	

CURRENT ASSESSMENT

Description	Code	Assessed	Assessed
RESIDNTL	1010	724,000	724,000
RES LAND	1010	302,700	302,700
Total		1,026,700	1,026,700

801

FY2025
BARNSTABLE, MA

VISION

RECORD OF OWNERSHIP

BK-VOL/PAGE		SALE DATE	Q/U	V/I	SALE PRIC	VC

PREVIOUS ASSESSMENTS (HISTORY)

Year	Code	Assessed	Year	Code	Assessed V	Year	Code	Assessed
2025	1010	724,000	2024	1010	750,800	2023	1010	596,200
	1010	302,700		1010	302,700		1010	299,800
	Total	1,026,700		Total	1,053,500		Total	896,000

EXEMPTIONS

Year	Code	Description	Amount
		Total	

OTHER ASSESSMENTS

Code	Description	Number	Amount	Comm Int

This signature acknowledges a visit by a Data Collector or Assessor

ASSESSING NEIGHBORHOOD

Nbhd	Nbhd Name	B	Tracing	Batch
0108				CENVIL

NOTES

APPRAISED VALUE SUMMARY

Appraised Bldg. Value (Card)	611,300
Appraised Xf (B) Value (Bldg)	66,000
Appraised Ob (B) Value (Bldg)	46,700
Appraised Land Value (Bldg)	302,700
Special Land Value	0
Total Appraised Parcel Value	1,026,700
Valuation Method	C
Total Appraised Parcel Value	1,026,700

BUILDING PERMIT RECORD

Permit Id	Issue Date	Type	Description	Amount	Insp Date	% Comp	Date Comp	Comments

VISIT / CHANGE HISTORY

Date	Id	Type	Is	Cd	Purpost/Result

LAND LINE VALUATION SECTION

B	Use Code	Description	Zone	LA	Land Units		Unit Price	Size Adj	AC Disc	Site Index	Cond.	Nbhd.	Nbhd. Adj	Notes	Location Adjustmen		Adj Unit P	Land Value

Total Card Land Units | Parcel Total Land Area | Total Land Value

Property Location 265 SOUTH MAIN STREET | Map ID 207/ 097/ 004/ / | Bldg Name | State Use 1010
Vision ID 14585 | Account # 352497 | Bldg # 1 | Sec # 1 of 1 | Card # 2 of 2 | Print Date 12/19/2024 11:21:49

CONSTRUCTION DETAIL

Element	Cd	Description
Style	07	Modern/Contemp
Model	01	Residential
Grade:	C+	Average Plus
Stories	1.8	
Exterior Wall 1	14	Wood Shingle
Exterior Wall 2	11	Clapboard
Roof Structure	03	Gable/Hip
Roof Cover	03	Asph/F Gls/Cmp
Interior Wall 1	03	Plastered
Interior Wall 2		
Interior Floor 1	14	Carpet
Interior Floor 2	12	Hardwood
Heat Fuel	03	Gas
Heat Type	04	Hot Air
AC Type	03	Central
Bedrooms	03	3 Bedrooms
Full Baths	2	
Half Baths	1	
Extra Fixtures		
Total Rooms	8	8 Rooms
Bath Style		
Kitchen Style		
Occupancy		
Sewer Occupan		
Accessory Apt		
Foundation Alt	01	Poured Conc.
Rms Prts		
Bath Split	21	2 Full-1 Half

CONSTRUCTION DETAIL (CONTINUED)

Element	Cd	Description

CONDO DATA

Parcel Id		C		Owne	0.0
		B		S	

Adjust Type	Code	Description	Factor%
Condo Flr			
Condo Unit			

COST / MARKET VALUATION

Building Value New	
Year Built	
Effective Year Built	
Depreciation Code	
Remodel Rating	
Year Remodeled	
Depreciation %	
Functional Obsol	
External Obsol	
Trend Factor	
Condition	
Condition %	
Percent Good	
RCNLD	
Dep % Ovr	
Dep Ovr Comment	
Misc Imp Ovr	
Misc Imp Ovr Comment	
Cost to Cure Ovr	
Cost to Cure Ovr Comment	

OB - OUTBUILDING & YARD ITEMS(L) / XF - BUILDING EXTRA FEATURES(B)

Code	Description	L/B	Units	Unit Price	Yr Blt	Cond. Cd	% Gd	Grade	Grade Adj.	Appr. Value
FPIT	Fire Pit	L	1	3010.00	2019		95	C	1.00	2,900
WDC	Wood Deck w/	L	164	18.00	2002		66		0.00	2,600
WDC	Deck composit	L	524	24.00	2002		66		0.00	7,800

BUILDING SUB-AREA SUMMARY SECTION

Code	Description	Living Area	Floor Area	Eff Area	Unit Cost	Undeprec Value
	Ttl Gross Liv / Lease Area					