Property Location 51 WILLOW RUN DRIVE | Map ID 210/ 055/ / / | Bldg Name | State Use 1010
Vision ID 15035 | Account # 129836 | Bldg # 1 | Sec # 1 of 1 | Card # 1 of 1 | Print Date 12/20/2024 12:10:37

CURRENT OWNER

STEWART, ROBERT J & LAURIE J

51 WILLOW RUN DRIVE

CENTERVILLE MA 02632

TOPO / UTILITIES / STRT / ROAD / LOCATION

TOPO	UTILITIES	STRT / ROAD	LOCATION
1 Level	2 Public Water	1 Paved	
	4 Gas		
	6 Septic		3

SUPPLEMENTAL DATA

Alt Prcl ID		Plan Ref.	191/47
Split Zonin		Land Ct#	
BID Parcel		#SR	
ResExpt Q	YES:	Life Estate	
#DL 1	LOT 23	PP STATU	
#DL 2			
GIS ID	F_971144_2704075	Assoc Pid#	

CURRENT ASSESSMENT

Description	Code	Assessed	Assessed
RESIDNTL	1010	494,200	494,200
RES LAND	1010	161,200	161,200
Total		655,400	655,400

801

FY2025
BARNSTABLE, MA

VISION

RECORD OF OWNERSHIP

	BK-VOL/PAGE		SALE DATE	Q/U	V/I	SALE PRIC	VC
STEWART, ROBERT J & LAURIE J	31807	0136	01-29-2019	U	I	100	1F
STEWART, ROBERT J	31807	0134	12-18-2018	U	I	0	1F
STEWART, ROBERT JR & ROBERT J	13925	0291	06-12-2001	U	I	0	1A
STEWART, ROBERT	3329	0235	07-24-1981	U		0	

PREVIOUS ASSESSMENTS (HISTORY)

Year	Code	Assessed	Year	Code	Assessed V	Year	Code	Assessed
2025	1010	494,200	2024	1010	467,800	2023	1010	419,800
	1010	161,200		1010	161,200		1010	146,600
	Total	655,400		Total	629,000		Total	566,400

EXEMPTIONS

Year	Code	Description	Amount
2014	5C	RESIDENTIAL EXEMPTION	0.00
		Total	0.00

OTHER ASSESSMENTS

Code	Description	Number	Amount	Comm Int

This signature acknowledges a visit by a Data Collector or Assessor

ASSESSING NEIGHBORHOOD

Nbhd	Nbhd Name	B	Tracing	Batch
0105				CENVIL

NOTES

APPRAISED VALUE SUMMARY

Appraised Bldg. Value (Card)	447,400
Appraised Xf (B) Value (Bldg)	42,300
Appraised Ob (B) Value (Bldg)	4,500
Appraised Land Value (Bldg)	161,200
Special Land Value	0
Total Appraised Parcel Value	655,400
Valuation Method	C
Total Appraised Parcel Value	655,400

BUILDING PERMIT RECORD

Permit Id	Issue Date	Type	Description	Amount	Insp Date	% Comp	Date Comp	Comments
19-1601	05-14-2019	822	Insulation	5,000		100		Add R-38 fiberglass, R-45 cell
19-352	02-01-2019	835	Sid/Wind/Roof/	21,000		100		SIDING AND ROOF
12123	12-01-1995	OB	Out Building	1,200	01-15-1996	100	12-31-1996	CE SHED

VISIT / CHANGE HISTORY

Date	Id	Type	Is	Cd	Purpost/Result
08-03-2022	BM	22		22	Change of Address
04-16-2020	WD			FR	Field Review
10-27-2017	TR	02		03	Cycl Insp Comp
08-26-2014	GC	03		16	In Office Review
08-04-2014	JR	03		16	In Office Review
10-13-2009	PT	02		14	Cyclical Inspection
12-02-2000	PT	01		00	Meas/Listed-Interior Acces

LAND LINE VALUATION SECTION

B	Use Code	Description	Zone	LA	Land Units		Unit Price	Size Adj	AC Disc	Site Index	Cond.	Nbhd.	Nbhd. Adj	Notes	Location Adjustmen	Adj Unit P	Land Value
1	1010	Single Fam M-0	RD-	3	0.550	AC	176,344.00	1.66254	1.0000	5	1.00	0105	1.000		1.0000	293,171.9	161,200

Total Card Land Units 0.55 AC | Parcel Total Land Area 0.55 | Total Land Value 161,200

Property Location 51 WILLOW RUN DRIVE | Map ID 210/ 055/ / / | Bldg Name | State Use 1010
Vision ID 15035 | Account # 129836 | Bldg # 1 | Sec # 1 of 1 | Card # 1 of 1 | Print Date 12/20/2024 12:10:37

CONSTRUCTION DETAIL

Element	Cd	Description
Style	04	Cape Cod
Model	01	Residential
Grade:	C+	Average Plus
Stories	1.5	1 1/2 Stories
Exterior Wall 1	14	Wood Shingle
Exterior Wall 2		
Roof Structure	03	Gable/Hip
Roof Cover	03	Asph/F Gls/Cmp
Interior Wall 1	05	Drywall
Interior Wall 2		
Interior Floor 1	12	Hardwood
Interior Floor 2		
Heat Fuel	03	Gas
Heat Type	05	Hot Water
AC Type	01	None
Bedrooms	03	3 Bedrooms
Full Baths	1	
Half Baths	1	
Extra Fixtures		
Total Rooms	7	
Bath Style		
Kitchen Style		
Occupancy		
Sewer Occupan		
Accessory Apt		
Foundation Alt	08	Mixed
Rms Prts		
Bath Split	11	1 Full-1 Half

CONSTRUCTION DETAIL (CONTINUED)

Element	Cd	Description

CONDO DATA

Parcel Id		C		Owne	0.0
		B		S	

Adjust Type	Code	Description	Factor%
Condo Flr			
Condo Unit			

COST / MARKET VALUATION

Building Value New	566,307
Year Built	1965
Effective Year Built	1997
Depreciation Code	G
Remodel Rating	
Year Remodeled	
Depreciation %	21
Functional Obsol	0
External Obsol	0
Trend Factor	1
Condition	
Condition %	
Percent Good	79
RCNLD	447,400
Dep % Ovr	
Dep Ovr Comment	
Misc Imp Ovr	
Misc Imp Ovr Comment	
Cost to Cure Ovr	
Cost to Cure Ovr Comment	

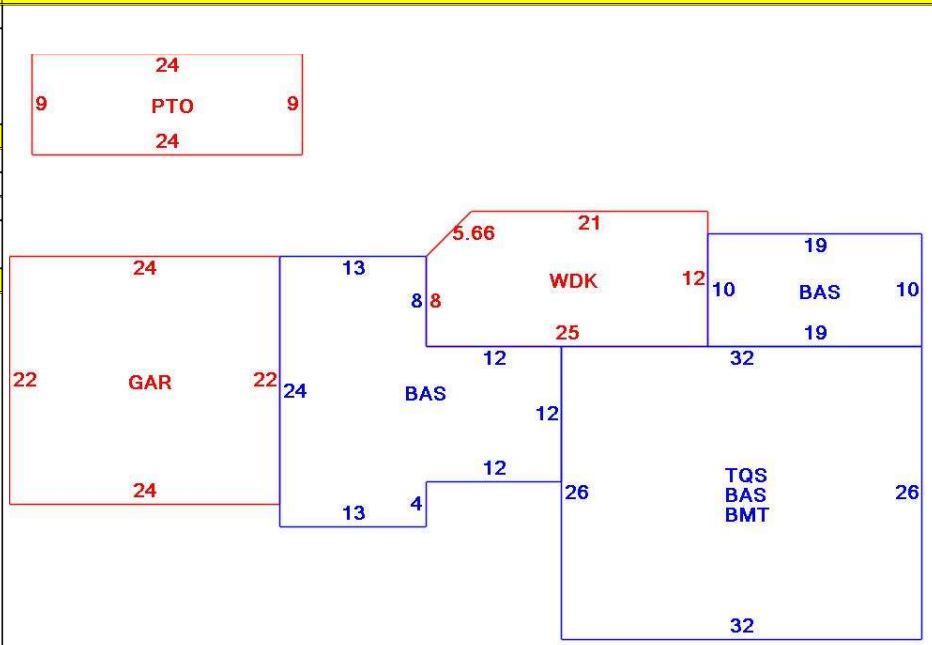

OB - OUTBUILDING & YARD ITEMS(L) / XF - BUILDING EXTRA FEATURES(B)

Code	Description	L/B	Units	Unit Price	Yr Blt	Cond. Cd	% Gd	Grade	Grade Adj.	Appr. Value
FPL2	Fireplace 1.5 s	B	1	6000.00	1995		79		0.00	4,700
PAT1	Patio- Average	L	216	5.89	1994		75		0.00	1,000
GAR	Attached Gara	B	528	40.00	1995		79		0.00	15,200
BMT	Basement-Unfi	B	832	26.01	1995		79		0.00	18,400
WDC	Wood Decking	L	292	20.00	1999		60		0.00	3,500
FPL1	Fireplace 1 sto	B	1	5000.00	1995		79		0.00	4,000

BUILDING SUB-AREA SUMMARY SECTION

Code	Description	Living Area	Floor Area	Eff Area	Unit Cost	Undeprec Value
BAS	First Floor	1,478	1,478	1,478	280.49	414,563
BMT	Basement Area	0	832	0	0.00	0
GAR	Attached Garage	0	528	0	0.00	0
PTO	Patio	0	216	0	0.00	0
TQS	Three Quarter Story	541	832	541	182.39	151,745
WDK	Wood Deck	0	292	0	0.00	0
	Ttl Gross Liv / Lease Area	2,019	4,178	2,019		566,308