Property Location 70 FIRST AVENUE (HYANNIS) Map ID 267/ 029/ / / Bldg Name State Use 1090
Vision ID 19164 Account # 402521 Bldg # 1 Sec # 1 of 1 Card # 1 of 2 Print Date 12/20/2024 12:58:06

CURRENT OWNER

PHILLIPS, DEBORAH LOCKHART TR
LOCKHART PHILLIPS INVESTMENT
25 MAIN STREET
PO BOX 209
SHELBURNE FA MA 01370

TOPO		UTILITIES		STRT / ROAD		LOCATION	
1	Level	6	Septic	1	Paved		
		4	Gas				
		2	Public Water			4	

SUPPLEMENTAL DATA

Alt Prcl ID		Plan Ref.	34/23
Split Zonin	RB;RF-1	Land Ct#	
BID Parcel		#SR	
ResExpt Q		Life Estate	
#DL 1	LOTS 29, 31 & 33	PP STATU	
#DL 2			
GIS ID	F_979665_2695213	Assoc Pid#	

CURRENT ASSESSMENT

Description	Code	Assessed	Assessed
RESIDNTL	1090	392,800	392,800
RES LAND	1090	210,900	210,900
Total		603,700	603,700

801
FY2025
BARNSTABLE, MA

VISION

RECORD OF OWNERSHIP

	BK-VOL/PAGE		SALE DATE	Q/U	V/I	SALE PRIC	VC
PHILLIPS, DEBORAH LOCKHART TR	34989	321	03-21-2022	U	I	1	1F
PHILLIPS, DEBORAH L	24591	0221	06-02-2010	U	I	1	1A
PHILLIPS, DEBORAH L & BRUCE C	13702	0318	04-05-2001	U	I	1	1A
LOCKHART, CHARLES F ET AL	3634	0186	12-21-1982	U	I	28,000	D

PREVIOUS ASSESSMENTS (HISTORY)

Year	Code	Assessed	Year	Code	Assessed V	Year	Code	Assessed
2025	1090	392,800	2024	1090	392,800	2023	1090	333,400
	1090	210,900		1090	210,900		1090	191,700
	Total	603,700		Total	603,700		Total	525,100

EXEMPTIONS

Year	Code	Description	Amount
		Total	0.00

OTHER ASSESSMENTS

Code	Description	Number	Amount	Comm Int

This signature acknowledges a visit by a Data Collector or Assessor

ASSESSING NEIGHBORHOOD

Nbhd	Nbhd Name	B	Tracing	Batch
0107				HYAN

NOTES

APPRAISED VALUE SUMMARY

Appraised Bldg. Value (Card)	366,700
Appraised Xf (B) Value (Bldg)	22,000
Appraised Ob (B) Value (Bldg)	4,100
Appraised Land Value (Bldg)	210,900
Special Land Value	0
Total Appraised Parcel Value	603,700
Valuation Method	C
Total Appraised Parcel Value	603,700

BUILDING PERMIT RECORD

Permit Id	Issue Date	Type	Description	Amount	Insp Date	% Comp	Date Comp	Comments
EXPR-22-4	03-30-2022	835	Sid/Wind/Roof/	20,000		100		Rip and replace roofing shingl
20-878	03-25-2020	880	Alt-Int work-Res	40,000	06-30-2021	100	06-30-2021	Renovation of kitchen and bat
19-3320	10-08-2019	822	Insulation	2,600	06-30-2020	100	06-30-2020	Insulation/Weatherization
18-860	04-20-2018	835	Sid/Wind/Roof/	5,000	06-30-2018	100	06-30-2018	Replacement of Roof Shingles

VISIT / CHANGE HISTORY

Date	Id	Type	Is	Cd	Purpost/Result
05-28-2021	CK	03		16	In Office Review
07-17-2020	SR	01		13	CALL BACK
05-21-2020	WD			FR	Field Review
04-22-2015	JR	03		03	Cycl Insp Comp
03-13-2014	SR	02		03	Cycl Insp Comp
06-25-2003	PT	02		01	Meas/Est
06-25-2003	PT	02		01	Meas/Est

LAND LINE VALUATION SECTION

B	Use Code	Description	Zone	LA	Land Units		Unit Price	Size Adj	AC Disc	Site Index	Cond.	Nbhd.	Nbhd. Adj	Notes	Location Adjustmen	Adj Unit P	Land Value
1	1090	Multi Hses M-01	SPLI	4	0.300	AC	176,344.00	2.84692	1.0000	5	1.00	0107	1.400		1.0000	702,854.2	210,900

Total Card Land Units 0.30 AC Parcel Total Land Area 0.30 Total Land Value 210,900

Property Location 70 FIRST AVENUE (HYANNIS) Map ID 267/ 029/ / / Bldg Name State Use 1090
Vision ID 19164 Account # 402521 Bldg # 1 Sec # 1 of 1 Card # 1 of 2 Print Date 12/20/2024 12:58:07

CONSTRUCTION DETAIL

Element	Cd	Description
Style	06	Conventional
Model	01	Residential
Grade:	C-	Average Minus
Stories	1	1 Story
Exterior Wall 1	14	Wood Shingle
Exterior Wall 2		
Roof Structure	03	Gable/Hip
Roof Cover	03	Asph/F Gls/Cmp
Interior Wall 1	05	Drywall
Interior Wall 2		
Interior Floor 1	12	Hardwood
Interior Floor 2		
Heat Fuel	03	Gas
Heat Type	04	Hot Air
AC Type	01	None
Bedrooms	02	2 Bedrooms
Full Baths	1	
Half Baths	0	
Extra Fixtures		
Total Rooms	5	5 Rooms
Bath Style	01	Old Style
Kitchen Style	01	Old Style
Occupancy		
Sewer Occupan	2	
Accessory Apt		
Foundation Alt	09	Blk/Pour Ftgs
Rms Prts		
Bath Split	10	1 Full-0 Half

CONSTRUCTION DETAIL (CONTINUED)

Element	Cd	Description

CONDO DATA

Parcel Id		C		Owne	0.0
		B		S	

Adjust Type	Code	Description	Factor%
Condo Flr			
Condo Unit			

COST / MARKET VALUATION

Building Value New	244,653
Year Built	1920
Effective Year Built	1989
Depreciation Code	G
Remodel Rating	
Year Remodeled	
Depreciation %	27
Functional Obsol	0
External Obsol	0
Trend Factor	1
Condition	
Condition %	
Percent Good	73
RCNLD	178,600
Dep % Ovr	
Dep Ovr Comment	
Misc Imp Ovr	
Misc Imp Ovr Comment	
Cost to Cure Ovr	
Cost to Cure Ovr Comment	

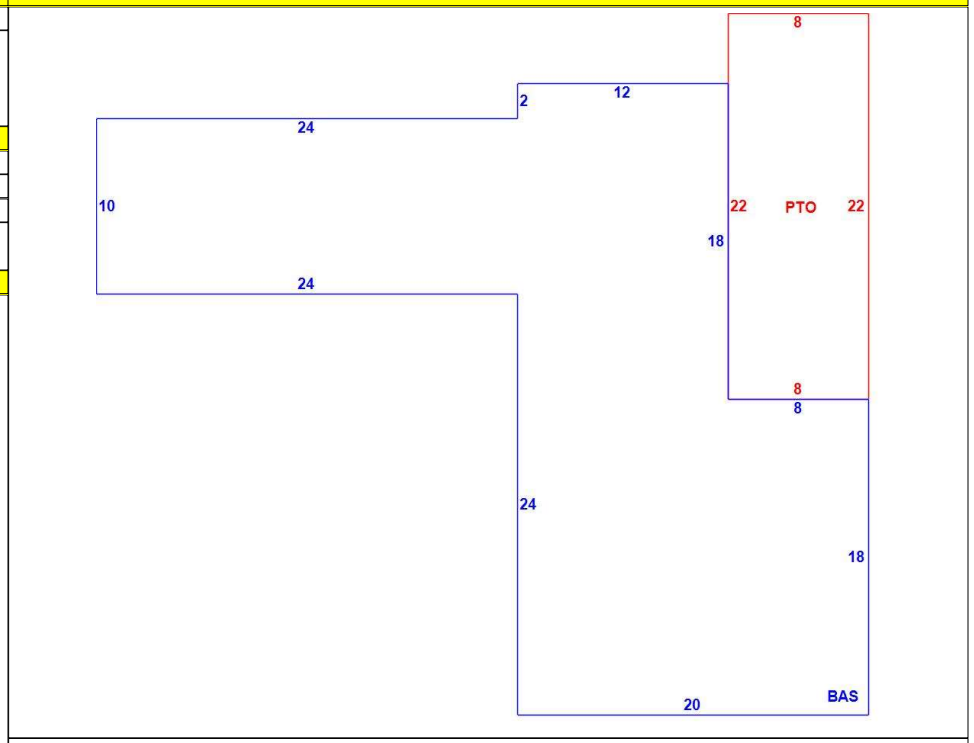

OB - OUTBUILDING & YARD ITEMS(L) / XF - BUILDING EXTRA FEATURES(B)

Code	Description	L/B	Units	Unit Price	Yr Blt	Cond. Cd	% Gd	Grade	Grade Adj.	Appr. Value
PATC	Conc Pavers	L	176	15.46	1987		68		0.00	2,100
SHED	Shed	L	80	18.00	1995		52		0.00	700

BUILDING SUB-AREA SUMMARY SECTION

Code	Description	Living Area	Floor Area	Eff Area	Unit Cost	Undeprec Value
BAS	First Floor	816	816	816	299.82	244,653
PTO	Patio	0	176	0	0.00	0
	Ttl Gross Liv / Lease Area	816	992	816		244,653

Property Location 70 FIRST AVENUE (HYANNIS) Map ID 267/ 029/ / / Bldg Name State Use 1090
Vision ID 19164 Account # 402521 Bldg # 2 Sec # 1 of 1 Card # 2 of 2 Print Date 12/20/2024 12:58:07

CURRENT OWNER

PHILLIPS, DEBORAH LOCKHART TR
LOCKHART PHILLIPS INVESTMENT
25 MAIN STREET
PO BOX 209
SHELBURNE FA MA 01370

TOPO		UTILITIES		STRT / ROAD		LOCATION	
1	Level	6	Septic	1	Paved		
		4	Gas				
		2	Public Water			4	

SUPPLEMENTAL DATA

Alt Prcl ID		Plan Ref.	34/23
Split Zonin	RB;RF-1	Land Ct#	
BID Parcel		#SR	
ResExpt Q		Life Estate	
#DL 1	LOTS 29, 31 & 33	PP STATU	
#DL 2			
GIS ID	F_979665_2695213	Assoc Pid#	

CURRENT ASSESSMENT

Description	Code	Assessed	Assessed
RESIDNTL	1090	392,800	392,800
RES LAND	1090	210,900	210,900
Total		603,700	603,700

801
FY2025
BARNSTABLE, MA

VISION

RECORD OF OWNERSHIP

	BK-VOL/PAGE		SALE DATE	Q/U	V/I	SALE PRIC	VC
PHILLIPS, DEBORAH LOCKHART TR	34989	321	03-21-2022	U	I	1	1F
PHILLIPS, DEBORAH L	24591	0221	06-02-2010	U	I	1	1A
PHILLIPS, DEBORAH L & BRUCE C	13702	0318	04-05-2001	U	I	1	1A
LOCKHART, CHARLES F ET AL	3634	0186	12-21-1982	U	I	28,000	D

PREVIOUS ASSESSMENTS (HISTORY)

Year	Code	Assessed	Year	Code	Assessed V	Year	Code	Assessed
2025	1090	392,800	2024	1090	392,800	2023	1090	333,400
	1090	210,900		1090	210,900		1090	191,700
	Total	603,700		Total	603,700		Total	525,100

EXEMPTIONS

Year	Code	Description	Amount
		Total	0.00

OTHER ASSESSMENTS

Code	Description	Number	Amount	Comm Int

This signature acknowledges a visit by a Data Collector or Assessor

APPRAISED VALUE SUMMARY

Appraised Bldg. Value (Card)	366,700
Appraised Xf (B) Value (Bldg)	22,000
Appraised Ob (B) Value (Bldg)	4,100
Appraised Land Value (Bldg)	210,900
Special Land Value	0
Total Appraised Parcel Value	603,700
Valuation Method	C
Total Appraised Parcel Value	603,700

ASSESSING NEIGHBORHOOD

Nbhd	Nbhd Name	B	Tracing	Batch
0107				HYAN

NOTES

BUILDING PERMIT RECORD

Permit Id	Issue Date	Type	Description	Amount	Insp Date	% Comp	Date Comp	Comments

VISIT / CHANGE HISTORY

Date	Id	Type	Is	Cd	Purpost/Result

LAND LINE VALUATION SECTION

B	Use Code	Description	Zone	LA	Land Units		Unit Price	Size Adj	AC Disc	Site Index	Cond.	Nbhd.	Nbhd. Adj	Notes	Location Adjustmen		Adj Unit P	Land Value
2	1090	Multi Hses M-01	SPLI	4	0	SF	0.00	1.00000	1.0000	5	1.00	0107	1.400			0.0000	0	0

Total Card Land Units 0.00 SF Parcel Total Land Area 0.30 Total Land Value 0

Property Location 70 FIRST AVENUE (HYANNIS) Map ID 267/ 029/ / / Bldg Name State Use 1090
Vision ID 19164 Account # 402521 Bldg # 2 Sec # 1 of 1 Card # 2 of 2 Print Date 12/20/2024 12:58:07

CONSTRUCTION DETAIL

Element	Cd	Description
Style	06	Conventional
Model	01	Residential
Grade:	C	Average
Stories	1	1 Story
Exterior Wall 1	14	Wood Shingle
Exterior Wall 2		
Roof Structure	03	Gable/Hip
Roof Cover	03	Asph/F Gls/Cmp
Interior Wall 1	05	Drywall
Interior Wall 2		
Interior Floor 1	12	Hardwood
Interior Floor 2		
Heat Fuel	03	Gas
Heat Type	05	Hot Water
AC Type	01	None
Bedrooms	02	2 Bedrooms
Full Baths	1	
Half Baths	0	
Extra Fixtures		
Total Rooms	5	5 Rooms
Bath Style	03	Modern
Kitchen Style	02	Modernized
Occupancy		
Sewer Occupan		
Accessory Apt		
Foundation Alt	02	Conc. Block
Rms Prts		
Bath Split	10	1 Full-0 Half

CONSTRUCTION DETAIL (CONTINUED)

Element	Cd	Description

CONDO DATA

Parcel Id		C		Owne	0.0
		B		S	

Adjust Type	Code	Description	Factor%
Condo Flr			
Condo Unit			

COST / MARKET VALUATION

Building Value New	272,545
Year Built	1930
Effective Year Built	1984
Depreciation Code	A
Remodel Rating	
Year Remodeled	
Depreciation %	31
Functional Obsol	0
External Obsol	0
Trend Factor	1
Condition	
Condition %	
Percent Good	69
RCNLD	188,100
Dep % Ovr	
Dep Ovr Comment	
Misc Imp Ovr	
Misc Imp Ovr Comment	
Cost to Cure Ovr	
Cost to Cure Ovr Comment	

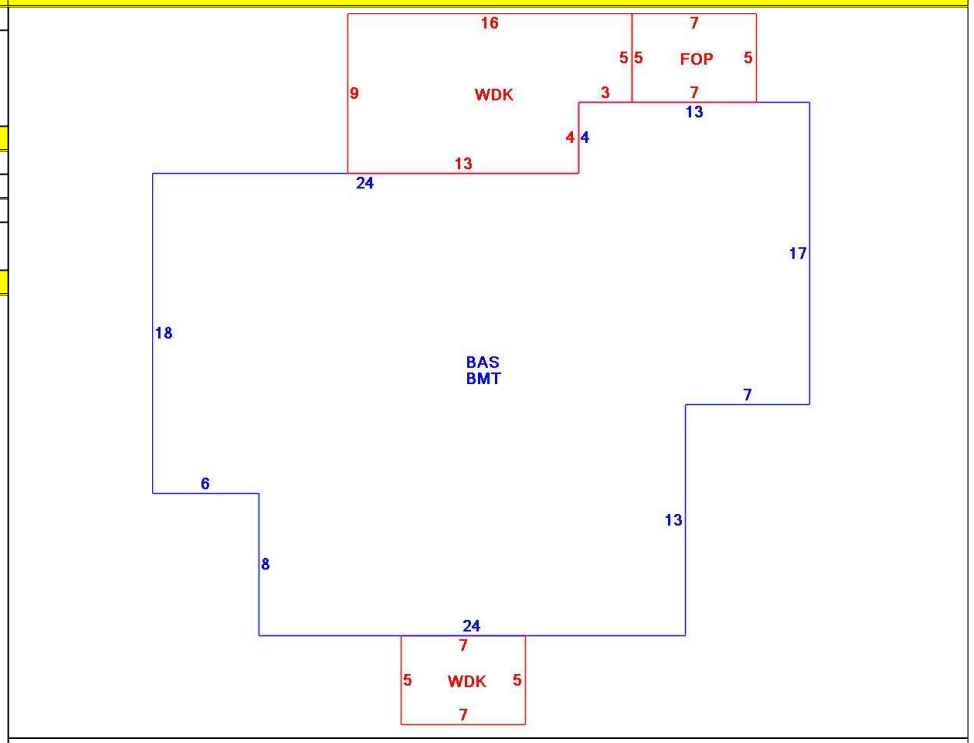

OB - OUTBUILDING & YARD ITEMS(L) / XF - BUILDING EXTRA FEATURES(B)

Code	Description	L/B	Units	Unit Price	Yr Blt	Cond. Cd	% Gd	Grade	Grade Adj.	Appr. Value
FPL1	Fireplace 1 sto	B	1	5000.00	1979		69		0.00	3,500
WDC	Wood Deck w/	L	167	18.00	1986		34		0.00	1,300
FOP	Open Porch-ro	B	35	55.00	1979		69		0.00	1,800
BMT	Basement-Unfi	B	875	26.01	1979		69		0.00	16,700

BUILDING SUB-AREA SUMMARY SECTION

Code	Description	Living Area	Floor Area	Eff Area	Unit Cost	Undeprec Value
BAS	First Floor	875	875	875	311.48	272,545
BMT	Basement Area	0	875	0	0.00	0
FOP	Open Porch	0	35	0	0.00	0
WDK	Wood Deck	0	167	0	0.00	0
	Ttl Gross Liv / Lease Area	875	1,952	875		272,545